MAN-19100

Shelbourne REYNOLDS

FBO2500 & FBO2800

PARTS MANUAL

FLAIL MOWER

Shelbourne Reynolds Engineering Ltd
Stanton
Bury St Edmunds
Suffolk
IP31 2AR
England

Telephone: 01359 250415 Stores Direct : 01359 251231
Fax: 01359 250464 Stores Direct: 01359 252031

Issue 7 14/02/2024

www.shelbourne.com

YouTube

ORDERING SPARE PARTS

IMPORTANT

Your Flail Mower is a made up of a Machine assembly number (common parts), specific sub assemblies and also customer optional build kits. The machine, sub assemblies and optional kit numbers are listed in the front pages of your Operators manual, part no. MAN-19000, If you do not have these numbers please contact Shelbourne Reynolds Parts Department direct on (telephone) 01359 251231.

To ensure that you order the correct part from your SRE dealer please use the following procedure.

ALWAYS QUOTE THE MACHINE AND SERIAL NUMBERS WHEN ORDERING.

Refer to the Parts Manuals front page/s, listing the machine assemblies. Select the correct machine assembly number which is printed in the top left corner of the page (starting with 8599_ _ 01), This machine number can also be taken off the Flail Mower identification plate located on the front of the main chassis beam.

On this page you will find the parts listing for the common parts for every configuration of that machine assembly number. You will find the corresponding drawing by either looking at the facing page or progressing through the manual to the next drawing. The drawings indicate the components by item numbers, which you will find, are repeated in the left-hand side of your parts listing, and therefore referring to the correct part.

Note all parts will not be found listed below the machine number.
Other parts will be from specific sub assemblies and optional kits. These sub assemblies and kits will be found in numerical order further through the manual.
Sub assemblies start with 8590_ _ 01 and kits start with KIT- 85 _ _ _.

List Of Kit Numbers

859900 01	2.8m Flail Mower Standard Parts	1
859902 02	2.5m Flail Mower Standard Parts	3
859000 01	Rotor Mounting Sub Assembly	5
859001 01	Flail Mower Drive Sub Assy	7
859001 02	2.5m Drive Line Sub Assembly	9
859002 01	Flail Mower Roller	11
859002 02	2.5m Flail Mower Roller	13
859003 01	Mower Shell Sub Assembly	15
859003 02	2.5m Mower Shell Sub Assembly	17
859004 01	Flail Mower Drive Cover	19
GEA-0201G	Gearbox	21
KIT-85000	Competition Flail Rotor Kit	23
KIT-85001	Hammer Flail Rotor Kit	25
KIT-85002	Flail Mower Skids	27
KIT-85003	Flail Mower Skids	29
KIT-85004	Head Stock Sub Assy	32
KIT-85005	Transfer Kit	35
KIT-85006	Nose Kit (Rubber)	37
KIT-85008	Skid Kit	39
KIT-85009	Mulching Kit	41
KIT-85013	2.5m Hammer Flail Rotor Kit	43
KIT-85014	2.5m Nose Kit (Rubber)	45
KIT-85015	2.5m Head Staock Sub Assembly	48
KIT-85016	2.5m Nose Kit (Metal Flap)	51
KIT-85017	FBO2500 Transfer Kit	53
KIT-85018	2.8m Hammer 30 Flail Rotor Kit	55

Shelbourne Reynolds Engineering Limited

ASSY NUMBER: 859900 01				ASSY DESCRIPTION: 2.8m FLAIL MOWER STANDARD PARTS			
ITEM	PART NO	DESCRIPTION	QTY	ITEM	PART NO	DESCRIPTION	QTY
1	859000 01	ROTOR BEARING MOUNTING SUB	1				
2	859001 01	DRIVE LINE SUB ASSY	1				
3	859002 01	ROLLER SUB ASSY	1				
4	859003 01	MOWER SHELL SUB ASSY	1				
5	859004 01	DRIVE GUARD SUB ASSY	1				

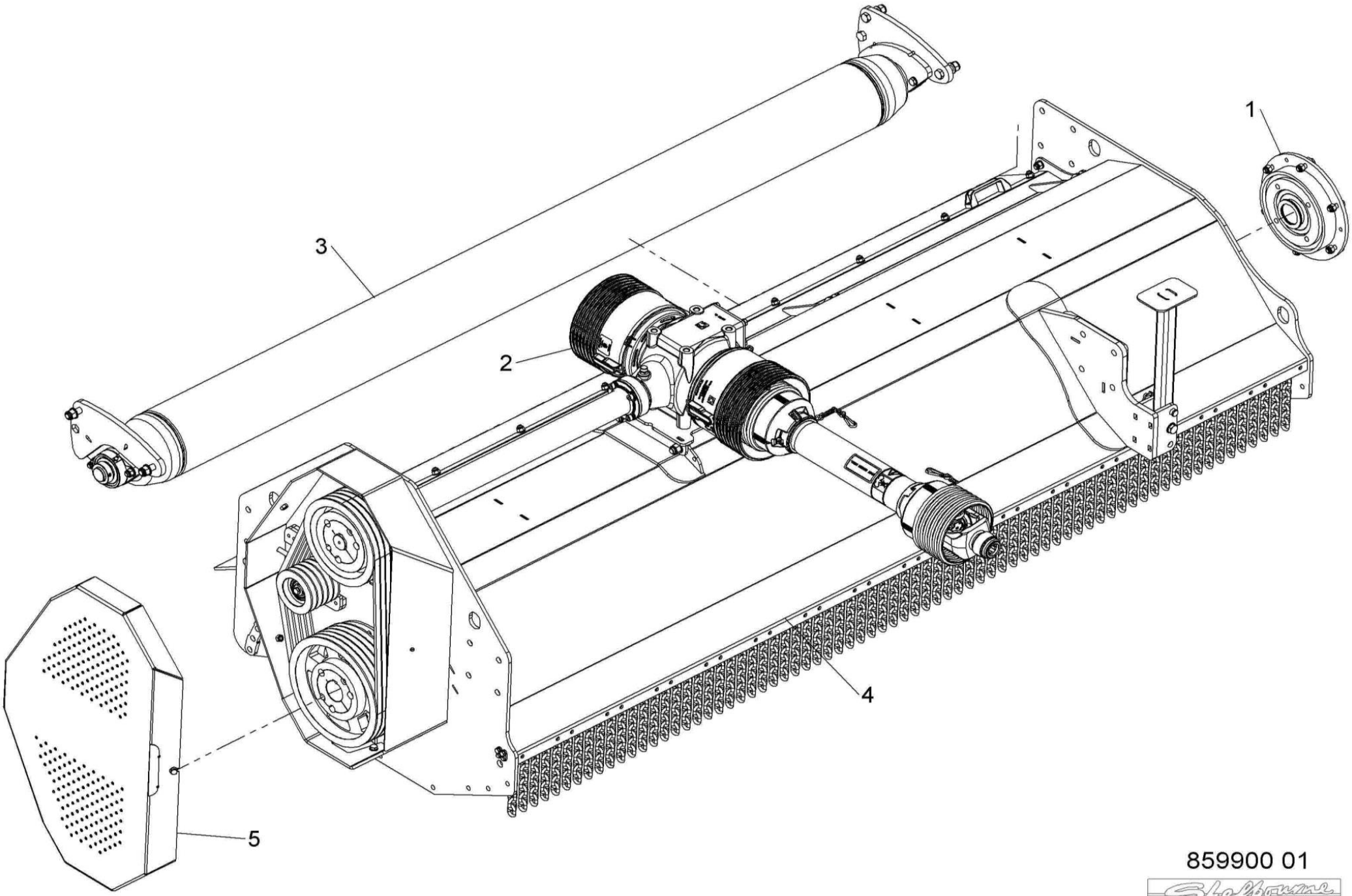

859900 01

Shelbourne Reynolds Engineering Limited

ASSY NUMBER: 859900 02				ASSY DESCRIPTION: 2.5m FLAIL MOWER STANDARD PARTS			
ITEM	PART NO	DESCRIPTION	QTY	ITEM	PART NO	DESCRIPTION	QTY
1	859000 01	ROTOR BEARING MOUNTING SUB	1				
2	859001 02	2.5m DRIVE LINE SUB ASSY	1				
3	859002 02	2.5m ROLLER SUB ASSY	1				
4	859003 02	2.5m MOWER SHELL SUB ASSY	1				
5	859004 01	DRIVE GUARD SUB ASSY	1				

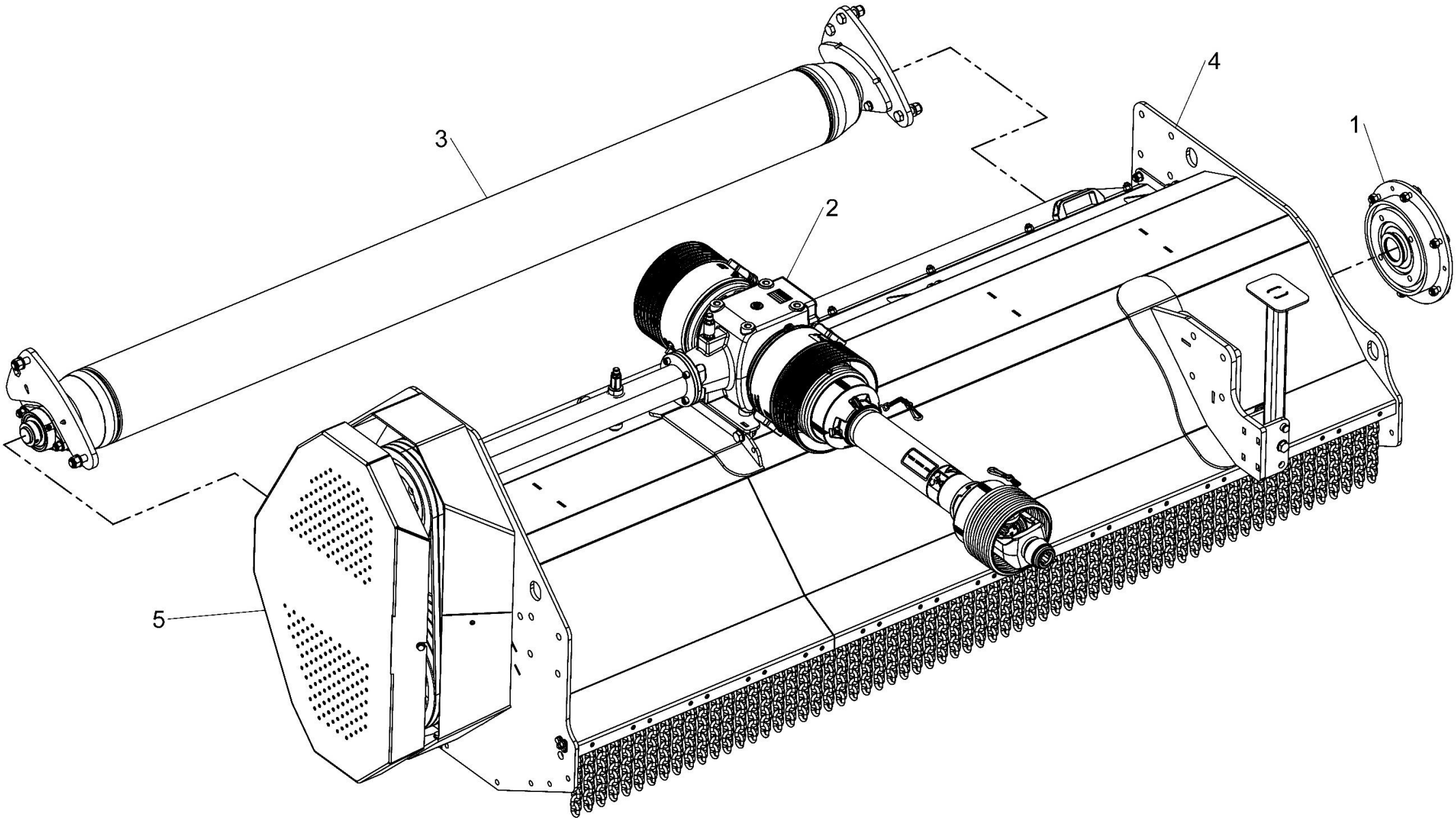

859902 02

Shelbourne Reynolds Engineering Limited

ASSY NUMBER: 859000 01				ASSY DESCRIPTION: ROTOR MOUNTING SUB ASSY			
ITEM	PART NO	DESCRIPTION	QTY	ITEM	PART NO	DESCRIPTION	QTY
1	850010 01	DRIVE END TOP HAT W/A	1				
2	850013 01	IDLE END TOP HAT W/A	1				
3	850082 01	MACHINED FLANGE BEARING	1				
4	BRG-26045	FLANGE BEARING	1				
5	NUT-0269	NUT	12				
6	850016 01	IDLE ROTOR BEARING GUARD W/A	1				
7	WSH-0018	WASHER	12				
8	BLTA12290	HEX HD BOLT	3				
9	HSS-0250	HEX HD SETSCREW	3				
10	HSS-0241	HEX HD SETSCREW	6				
11	WSH-0070	SPRING WASHER	8				
12	HSS-0316	HEX HD SETSCREW	8				
13	190548 30	WASHER	5				
14	LUB-00055	ADAPTOR 45DEG	1				
15	NIP-0001	GREASE NIPPLE STRAIGHT	1				
16	LUB-00045	STARIGHT ADAPTOR	1				
17	LUB-00052	GREASE NIPPLES	1				
18	NIP-00600	GREASE NIPPLE STRAIGHT	1				
19	LUB-00044	GREASE PIPE	0.15				

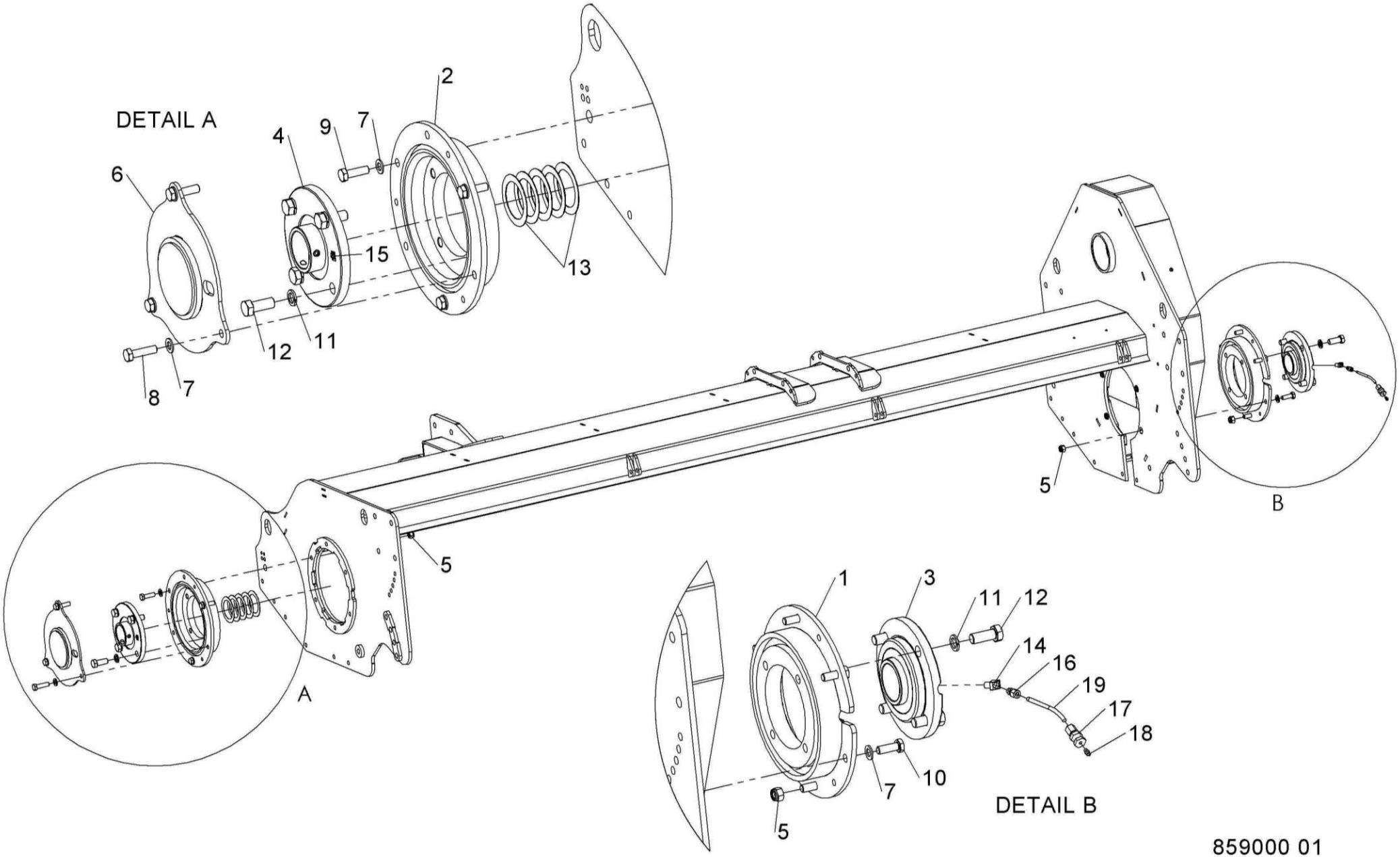
DETAIL A
2
9
7
4
6
15
13
12
11
8
7
5
B
5
A
1
3
11
12
14
16
19
17
18
10
7
5
DETAIL B

859000 01

ASSY NUMBER: 859001 01

ASSY DESCRIPTION: DRIVE LINE SUB ASSY

ITEM	PART NO	DESCRIPTION	QTY
1	GEA-0201G	GEARBOX AND EXTENSION	1
		SEE GEA-0201G PAGE	
		FOR PARTS BREAKDOWN	
OR	GEA-0201B	GEARBOX AND EXTENSION	
		FITTED TO FBO28170001, 180005,	
		180006 & 190011 ONLY	
2	850021 01	250 PCD V PULLEY	1
3	BSHZ04589	45ID TAPER LOCK PULLEY	1
4	BSHZ06089	60 ID TAPER LOCK BUSH	1
5	K1811080	SHAFT KEY	1
6	K1409090	SHAFT KEY	1
7	850022 01	TENSIONER PULLEY	1
8	BEL-10190	VEE BELT	5
9	HSS-0316	HEX HD SETSCREW	4
10	WSHA30161	WASHER	4
11	190119 75	WASHER	1
12	850076 01	BEARING SPACER SLEEVE	1
13	850077 01	TENSIONER W/A	1
14	HSS-0194	HEX HD BOLT	1
15	WSH-0061	WASHER	1
16	850020 01	315 PCD V PULLEY	1
17	131063	SPRING	1
18	850074 01	SPACER	1
19	850075 01	SPRING GUIDE	1
20	190119 16	WASHER	1
21	NUT-0170	NUT	3
22	850207 01	GEARBOX MOUNT	1
23	WSH-0018	WASHER	2
24	NUT-0271	NUT	4
25	HSS-0317	HEX HD SETSCREW	4
26	HSSA12770	HEX HD SETSCREW	1
27	BRG-3358	BEARING	2
28	PTO-36001	PTO SHAFT, FBO28200021-0025,	1
		FBO28210038-0043, FBO28220069	
		& ONWARDS.	
OR	PTO-36002	PTO SHAFT, FBO28200018-0020,	1
		FBO28200027-FBO28210037 &	
		FBO28210044-FBO28220068	
OR	PTO-36000	PTO SHAFT, UP TO FBO28200018 &	1
		FBO28200026	

ITEM	PART NO	DESCRIPTION	QTY
29	PTO-00975	PTO CONE	2
30	HSS-0191	SET SCREW	8
31	WSH-0015	WASHER	8
32	FITD00005	OIL SIGHT GAUGE	2
33	WSH-0024	WASHER	8
34	850201 01	PTO COVER	1
35	HSSG10145	BOLT	4
36	GEA-1524	BREATHER EXTENSION	2
37	198800 84	WASHER	6

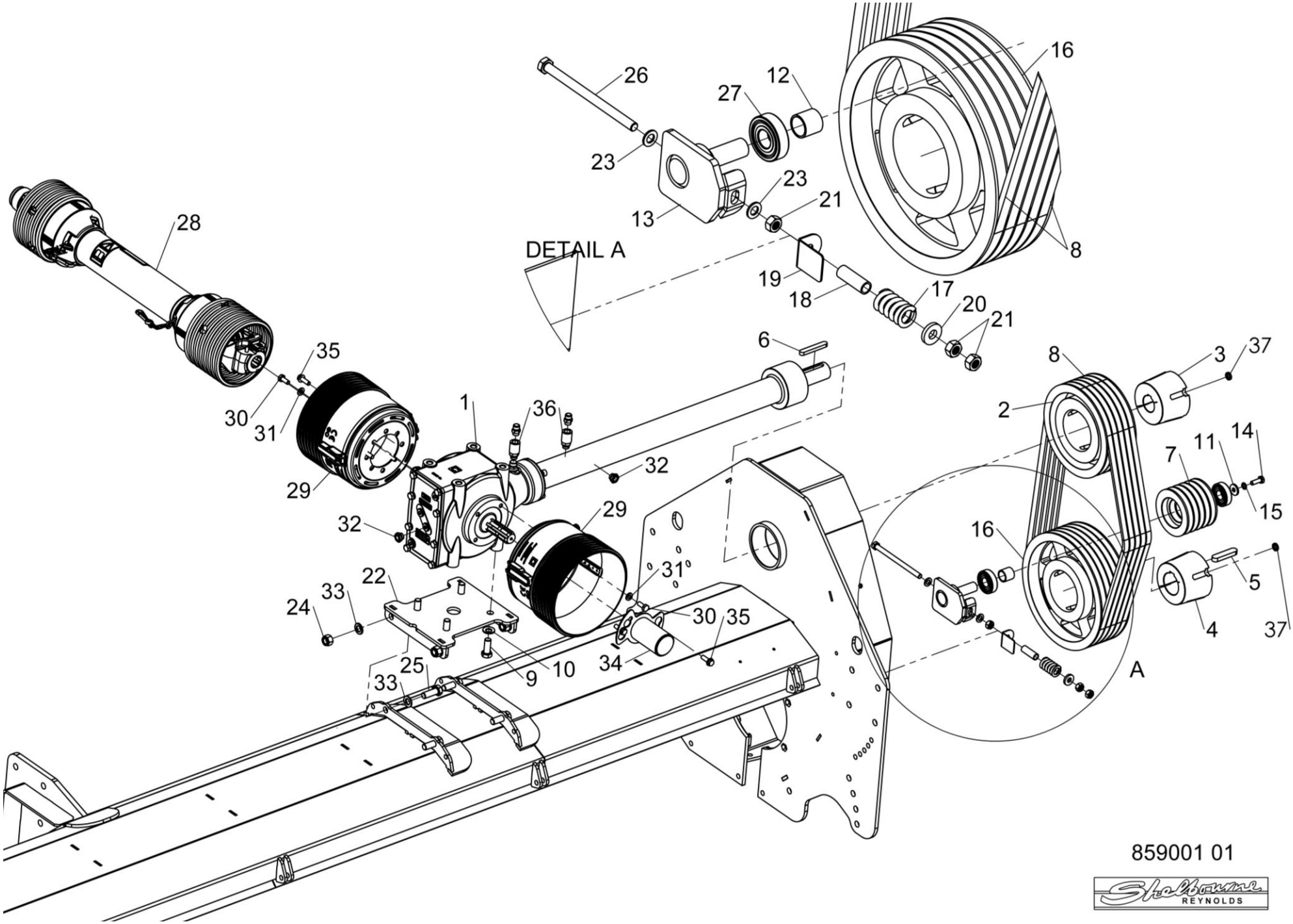
26
12
16
27
23
23
21
13
8
DETAIL A
19
18
17
20
21
28
6
35
8
3
37
30
31
1
36
2
11
14
7
32
29
29
15
32
16
31
22
5
33
24
30
35
4
37
25
10
34
9
33
A
859001 01
Shelbourne
REYNOLDS

ASSY NUMBER: 859001 02				ASSY DESCRIPTION: 2.5M DRIVE LINE SUB ASSY			
ITEM	PART NO	DESCRIPTION	QTY	ITEM	PART NO	DESCRIPTION	QTY
1	850274 01	GEARBOX AND EXTENSION **SEE 850274 01** **FOR PARTS BREAKDOWN**	1				
2	850021 01	250 PCD V PULLEY	1				
3	BSHZ04589	45ID TAPER LOCK PULLEY	1				
4	BSHZ06089	60 ID TAPER LOCK BUSH	1				
5	K1811080	SHAFT KEY	1				
6	K1409090	SHAFT KEY	1				
7	850022 01	TENSIONER PULLEY	1				
8	BEL-10190	VEE BELT	5				
9	HSS-0316	HEX HD SETSCREW	4				
10	WSHA30161	WASHER	4				
11	190119 75	WASHER	1				
12	850076 01	BEARING SPACER SLEEVE	1				
13	850077 01	TENSIONER W/A	1				
14	HSS-0194	HEX HD BOLT	1				
15	WSH-0061	WASHER	1				
16	850020 01	315 PCD V PULLEY	1				
17	131063	SPRING	1				
18	850074 01	SPACER	1				
19	850075 01	SPRING GUIDE	1				
20	190119 16	WASHER	1				
21	NUT-0170	NUT	3				
22	850207 01	GEARBOX MOUNT	1				
23	WSH-0018	WASHER	2				
24	NUT-0271	NUT	4				
25	HSS-0317	HEX HD SETSCREW	4				
26	HSSA12770	HEX HD SETSCREW	1				
27	BRG-3358	BEARING	2				
28	PTO-36001	PTO SHAFT,	1				
29	PTO-00975	PTO CONE	2				
30	HSS-0191	SET SCREW	8				
31	WSH-0015	WASHER	8				
32	FITD00005	OIL SIGHT GAUGE	2				
33	WSH-0024	WASHER	8				
34	850201 01	PTO COVER	1				
35	HSSG10145	BOLT	4				
36	GEA-1524	BREATHER EXTENSION	2				
37	198800 84	WASHER	6				

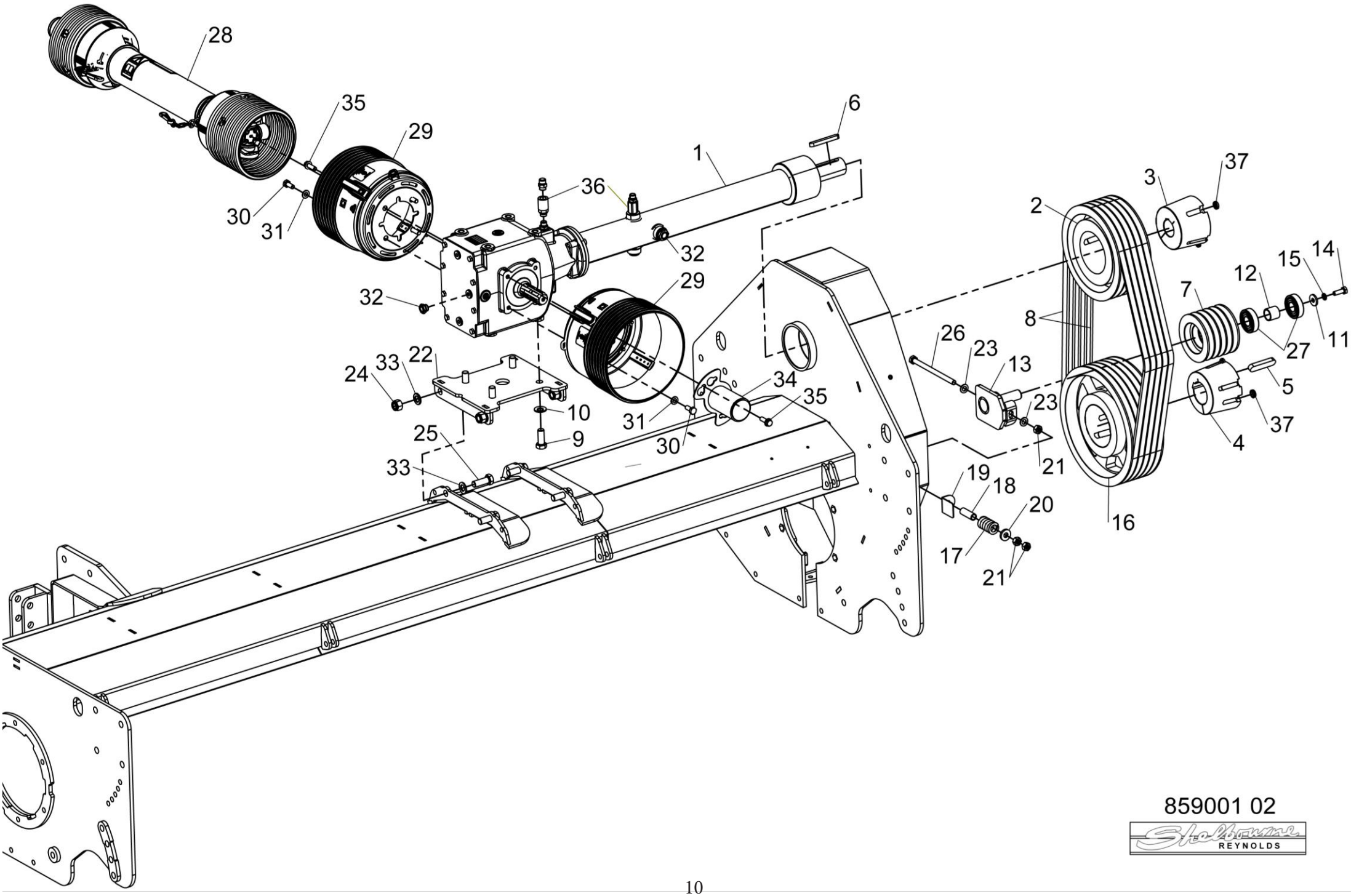
28
35
29
30
31
6
1
36
32
32
29
37
3
2
15
14
12
7
8
27
11
26
23
13
5
24
33
22
34
35
23
10
31
37
25
9
30
4
33
21
19
18
20
16
17
21
859001 02
Shelbourne
REYNOLDS

ASSY NUMBER: 859002 01				ASSY DESCRIPTION: FLAIL MOWER ROLLER			
ITEM	PART NO	DESCRIPTION	QTY	ITEM	PART NO	DESCRIPTION	QTY
1	850023 01	ROLLER W/ASSY	1				
2	850131 01	LH ROLLER SUB W/ASSY	1				
3	850131 02	RH ROLLER SUB W/ASSY	1				
4	BRG-24050	BEARING	2				
5	WSH-0024	WASHER	4				
6	NUT-0271	NUT	4				
7	NUT-0269	NUT	4				
8	HSS-0260	HEX HD BOLT	4				
9	WSH-0018	WASHER	8				
10	HSS-0320	HED HEAD BOLT	4				
11	NIP-0203	GREASE NIPPLE 45 DEG	2				

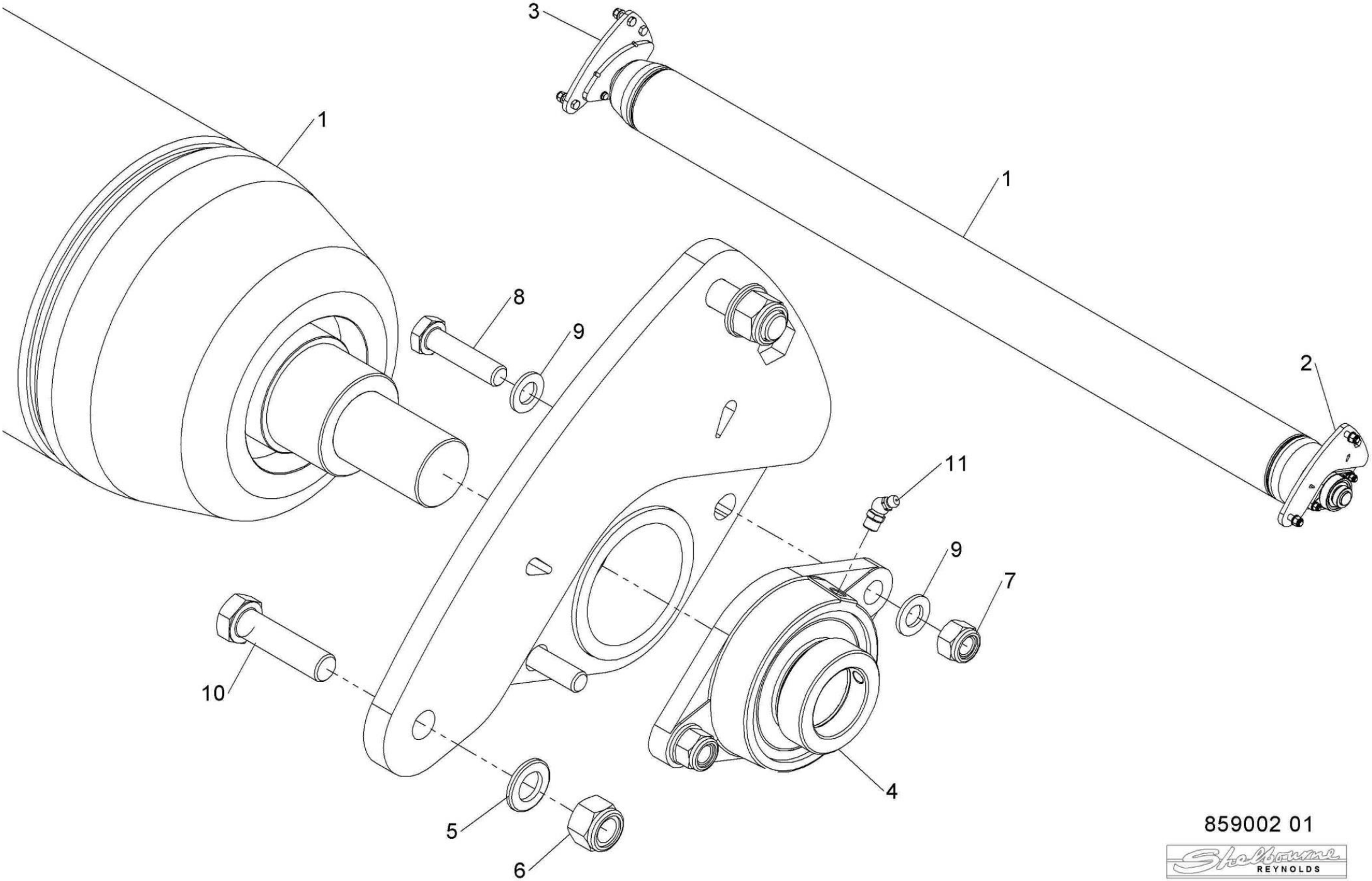
3
1
1
2
8
9
11
9
7
10
4
5
6
859002 01
Shelbourne
REYNOLDS

ASSY NUMBER: 859002 02				ASSY DESCRIPTION: 2.5m FLAIL MOWER ROLLER			
ITEM	PART NO	DESCRIPTION	QTY	ITEM	PART NO	DESCRIPTION	QTY
1	850023 02	ROLLER W/ASSY	1				
2	850131 01	LH ROLLER SUB W/ASSY	1				
3	850131 02	RH ROLLER SUB W/ASSY	1				
4	BRG-24050	BEARING	2				
5	WSH-0024	WASHER	4				
6	NUT-0271	NUT	4				
7	NUT-0269	NUT	4				
8	HSS-0260	HEX HD BOLT	4				
9	WSH-0018	WASHER	8				
10	HSS-0320	HED HEAD BOLT	4				
11	NIP-0203	GREASE NIPPLE 45 DEG	2				

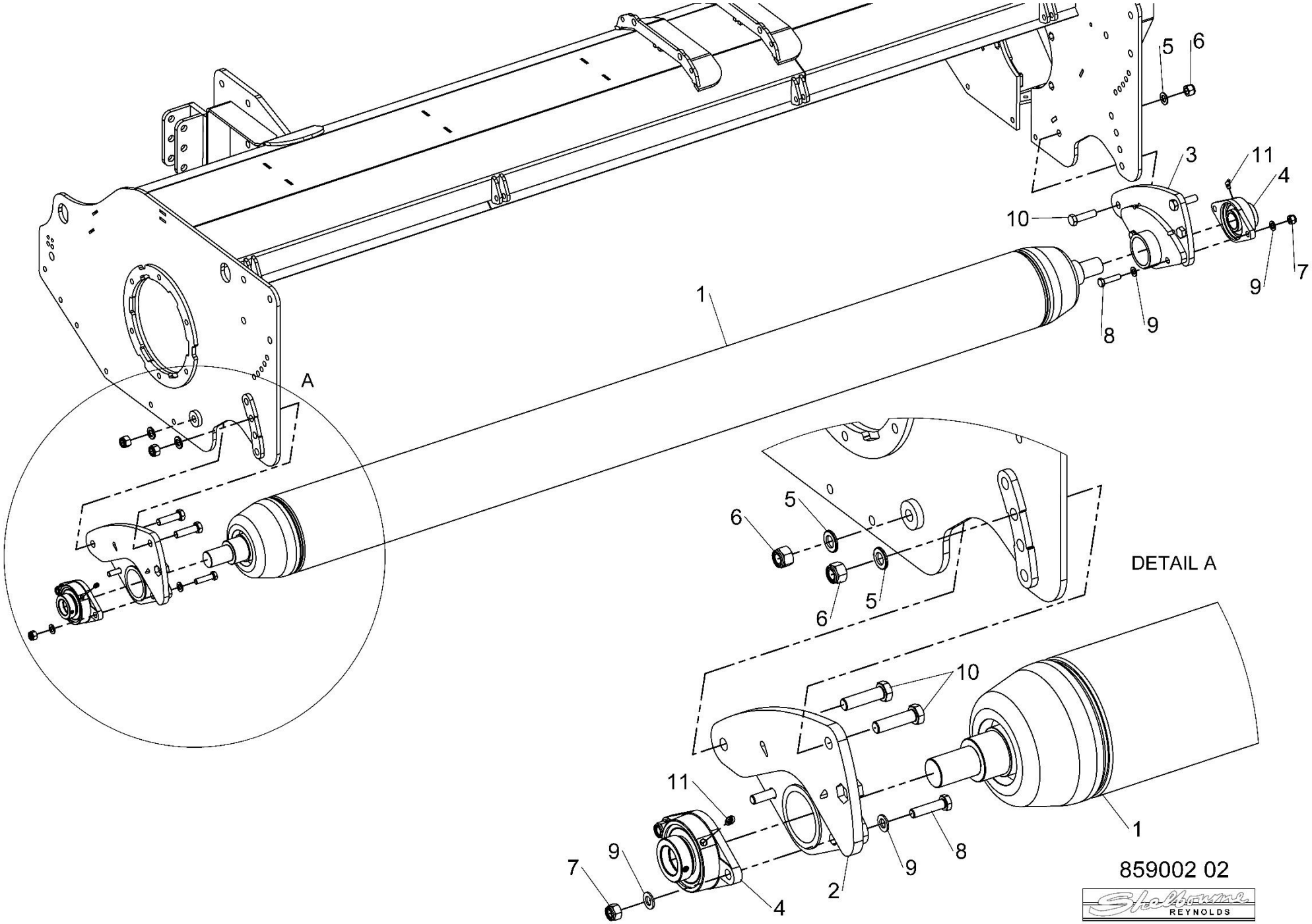
5
6
3
11
4
10
7
9
1
8
9
A
5
6
DETAIL A
6
5
10
11
1
9
8
7
9
2
4
859002 02
Shelbourne
REYNOLDS

ASSY NUMBER: 859003 01				ASSY DESCRIPTION: MOWER SHELL SUB ASSY			
ITEM	PART NO	DESCRIPTION	QTY	ITEM	PART NO	DESCRIPTION	QTY
1	850032 01	CHAIN ROD W/A	4				
2	850043 01	MOWER SHELL W/A	1				
3	850058 01	FILL IN PLATE	1				
4	850138 01	ADJUSTABLE FLAP W/A	1				
5	850070 01	REAR MATERIAL FLAP	1				
6	850071 01	RUBBER SHIM PLT	1				
7	HSS-0145	HEX HD BOLT	4				
8	HSS-0194	HEX HD BOLT	2				
9	HSS-0198	HEX HD BOLT	10				
10	HSS-0250	HEX HD SETSCREW	2				
11	NUT-0265	NUT	10				
12	NUT-0269	NUT	6				
13	WSH-0012	WASHER	4				
14	WSH-0015	WASHER	24				
15	WSH-0018	WASHER	12				
16	850118 01	CHAIN SKIRT	144				
17	290526 01	SERIAL NO. PLATE	1				
18	POP-0006	POP RIVET	2				
19	HSS-0265	SET SCREW	4				
20	HND-0000	BLACK PLASTIC HANDLE	2				
21	HSS-0096	SET SCREW	4				
22	WSH-0009	PLAIN WASHER	4				
23	NUT-0260	NYLOC NUT	4				
24	850143 01	MOWER STAND W/A	1				
25	BLTA16530	HEX HEAD BOLT	1				
26	WSH-0024	PLAIN WASHER	2				
27	NUT-0271	NYLOC NUT	1				
28	PIN-86571	PIN	1				
29	PIN-01601	LYNCH PIN	1				
30	CAP-0010	PLASTIC END CAP	1				

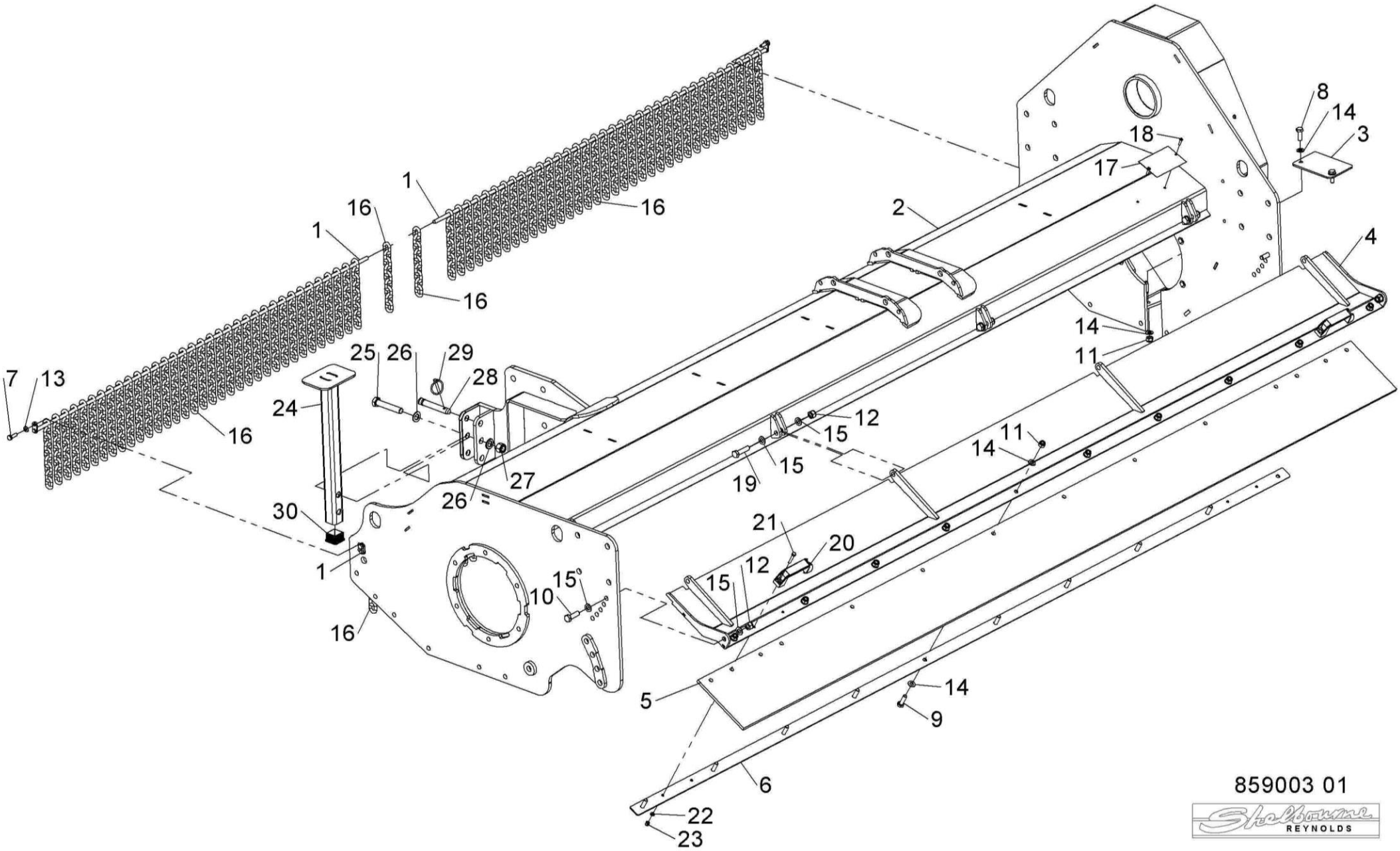
1
16
1
16
16
7
13
16
25
26
29
28
24
27
26
30
1
16
10
15
2
18
17
8
14
3
4
14
11
12
15
15
19
11
14
21
20
12
15
5
14
9
6
22
23
859003 01
Shelbourne
REYNOLDS

ASSY NUMBER: 859003 02				ASSY DESCRIPTION: 2.5m MOWER SHELL SUB ASSY			
ITEM	PART NO	DESCRIPTION	QTY	ITEM	PART NO	DESCRIPTION	QTY
1	850043 01	MOWER SHELL W/A	1				
2	850032 01	CHAIN ROD W/A	4				
3	WSH-0012	WASHER	4				
4	HSS-0145	HEX HD BOLT	4				
5	WSH-0015	WASHER	22				
6	NUT-0265	NUT	11				
7	HSS-0194	HEX HD BOLT	2				
8	850138 01	ADJUSTABLE FLAP W/A	1				
9	850070 01	REAR MATERIAL FLAP	1				
10	850071 01	RUBBER SHIM PLT	1				
11	HSS-0198	HEX HD BOLT	9				
12	850118 01	CHAIN SKIRT	128				
13	290526 01	SERIAL NO. PLATE	1				
14	WSH-0018	WASHER	12				
15	NUT-0269	NUT	6				
16	HSS-0265	SET SCREW	4				
17	HND-0000	BLACK PLASTIC HANDLE	2				
18	HSS-0250	HEX HEAD SET SCREW	2				
19	PIN-01601	LYNCH PIN	1				
20	WSH-0009	PLAIN WASHER	4				
21	NUT-0260	NYLOC NUT	4				
22	HSS-0096	SET SCREW	4				
23	850143 01	MOWER STAND W/A	1				
24	CAP-0010	PLASTIC END CAP	1				
25	PIN-86571	PIN	1				
26	WSH-0024	PLAIN WASHER	2				
27	NUT-0271	NYLOC NUT	1				
28	BLTA16530	HEX HEAD BOLT	1				
29	850058 01	FILL IN PLATE	1				
30	POP-0006	POP RIVET	2				

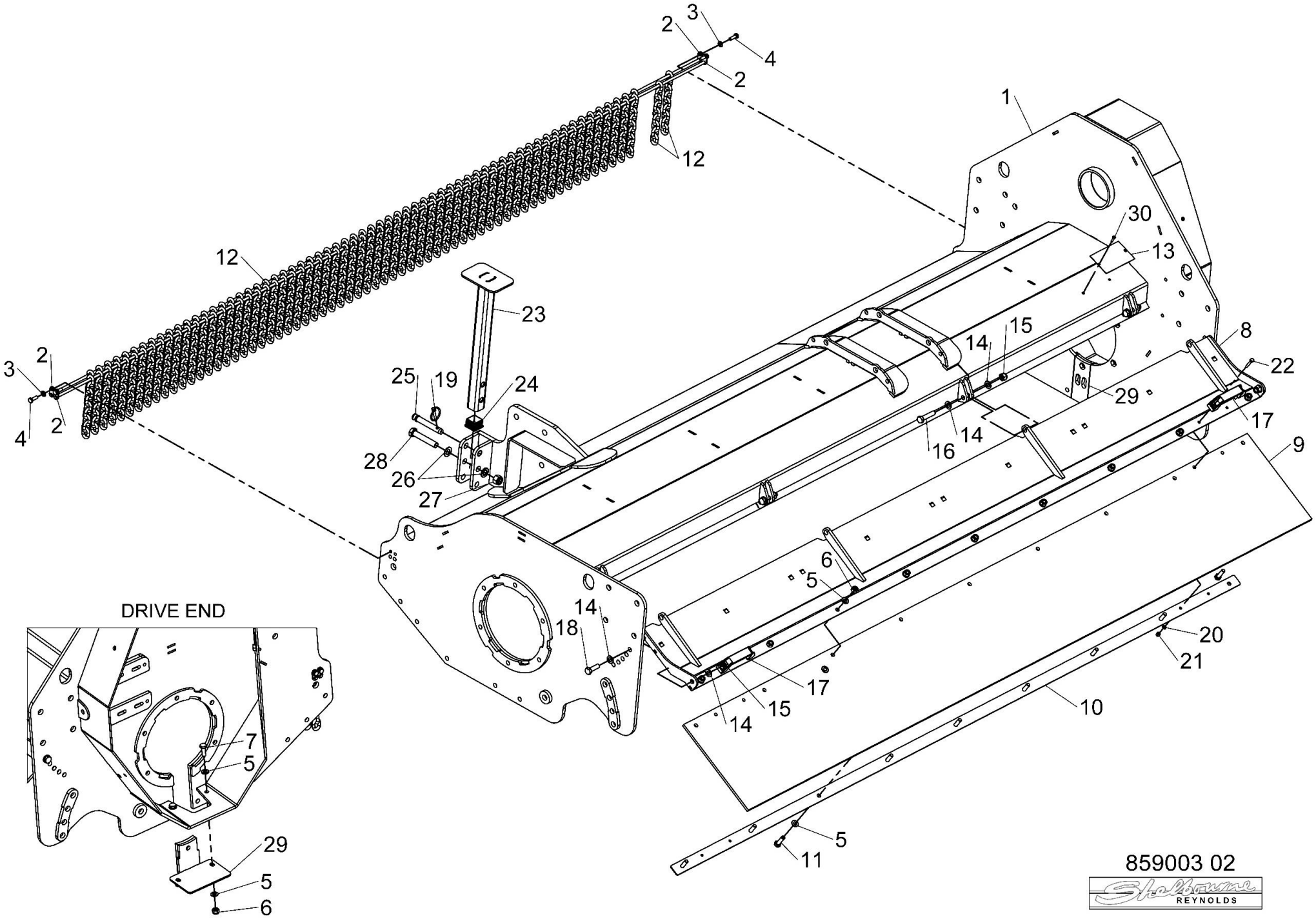
DRIVE END
859003 02
Shelbourne
REYNOLDS

Shelbourne Reynolds Engineering Limited

ASSY NUMBER: 859004 01				ASSY DESCRIPTION: FLAIL MOWER DRIVE COVER			
ITEM	PART NUMBER	DESCRIPTION	QTY	ITEM	PART NUMBER	DESCRIPTION	QTY
1	850146 01	DRIVE COVER	1				
2	NUT-0265	NUT	3				
3	HSSG10260	BOLT	3				

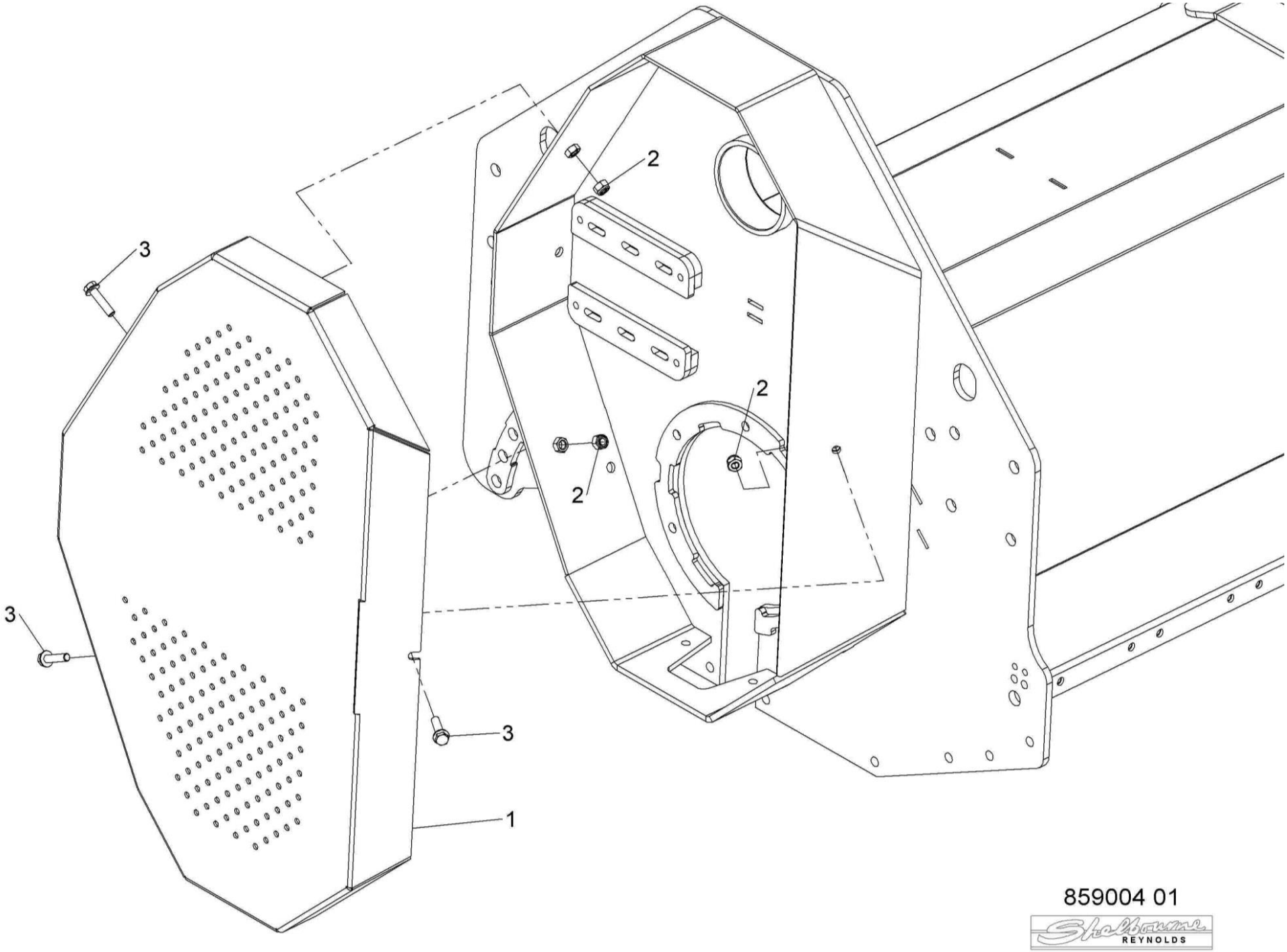
2
3
2
2
3
3
1
859004 01
Shelbourne
REYNOLDS

Shelbourne Reynolds Engineering Limited

ASSY NUMBER: GEA-0201G				ASSY DESCRIPTION: GEARBOX			
ITEM	PART NO	DESCRIPTION	QTY	ITEM	PART NO	DESCRIPTION	QTY
1	GEA-2011	HOUSING	1				
2	FITD00007	BULLS EYE LEVEL GAUGE	1				
3	GEA-2012	COVER	1				
4	GEA-2013	SETSCREW	8				
5	GEA-2014	COPPER WASHER	3				
6	GEA-2015	PLUG	3				
7	FIT-0218	FILLER/BREATHER	2				
8	GEA-2017	DRAIN PLUG	5				
9	GEA-2018	INTERNAL RETAINING RING	4				
10	GEA-2019	BEARING	2				
11	GEA-2020	BEVELED GEAR	1				
12	GEA-2021	SHAFT	1				
13	GEA-2022	EXTERNAL RETAINING RING	1				
14	GEA-2023	SHAFT SEAL	2				
15	WSH-1015	DOWTY WASHER	1				
16	FIT-0217	BLANKING PLUG	1				
17	GEA-2026	SHIM	1				
18	GEA-2027	BEARING	1				
19	GEA-2028	EXTERNAL RETAINING RING	1				
20	GEA-2029	BEARING	1				
21	GEA-2030	SHAFT/BEVEL GEAR	1				
22	GEA-2031	SHIM	2				
23	GEA-2032	SHIM	2				
24	GEA-2033	SPRING	8				
25	GEA-2034	OVERRUN TEETH	4				
26	GEA-2035	SHAFT COVER	1				
27	GEA-2036	CAP HEAD SCREW	4				
28	BRG-14595	BEARING	1				
29	SEAB04520	SHAFT SEAL	1				
30	GEA-2039	SHAFT	1				
31	GEA-2040	O-RING	1				
32	SEAB04005	SHAFT SEAL	1				
33	GEA-2042	ADAPTOR	1				
34	GEA-1524	EXTENSION	2				

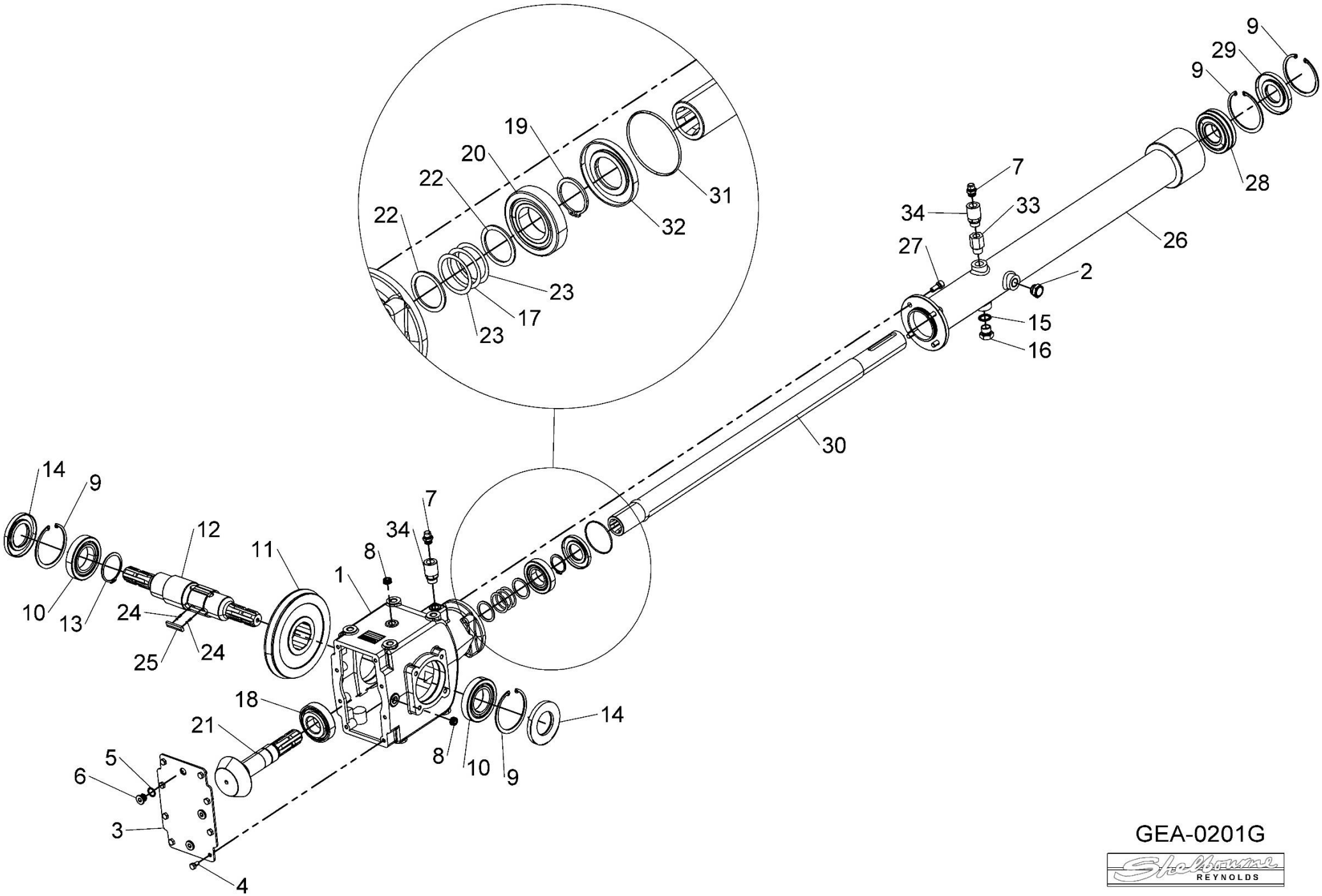
9
29
9
28
26
7
33
34
27
2
15
16
30
19
20
22
22
31
32
23
17
23
14
9
12
11
7
34
8
1
10
13
24
25
24
18
21
14
8
10
9
5
6
3
4

GEA-0201G

Shelbourne Reynolds Engineering Limited

ASSY NUMBER: KIT-85000				ASSY DESCRIPTION: COMPETITION FLAIL ROTOR KIT			
ITEM	PART NO	DESCRIPTION	QTY	ITEM	PART NO	DESCRIPTION	QTY
1	850000 01	COMPETITION FLAIL ROTOR W/A	1				
2	805046 01	SPACER	108				
3	FLL-20005S	COMPETIION FLAIL (DROP FORGED)	54				
4	NUTF15162	STOVER NUT	54				
5	BLTD16554	BOLT	54				
OR	BLTD16574	BOLT	AR				
OR	BLTD16604	BOLT	AR			**IMPORTANT**	
OR	BLTD16654	BOLT	AR				
6	850130 01	BALANCE WEIGHT (20G)	AR			ENSURE BALANCE WEIGHT ARE	
OR	850130 02	BALANCE WEIGHT (30G)	AR			NOT MOVED WHEN REPLACING FLAILS	
OR	850130 03	BALANCE WEIGHT (50G)	AR			EXACT POSITIONING IS CRITICAL	
						TO SMOOTH RUNNING	

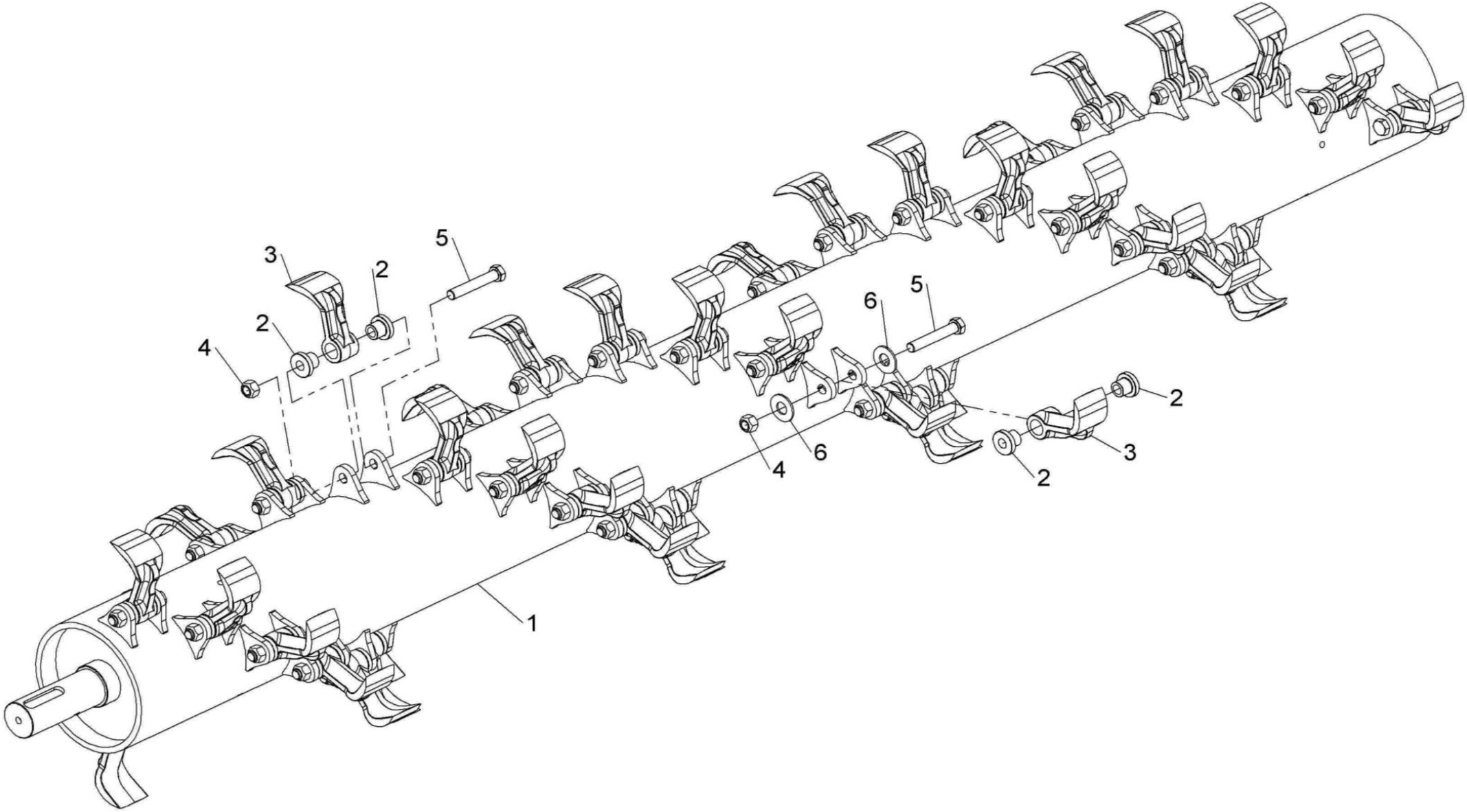

KIT-85000

ASSY NUMBER: KIT-85001				ASSY DESCRIPTION: 2.8m HAMMER FLAIL ROTOR KIT			
ITEM	PART NO	DESCRIPTION	QTY	ITEM	PART NO	DESCRIPTION	QTY
1	850008 01	HAMMER FLAIL ROTOR W/A	1				
2	FLL-35000	HAMMER FLAIL 2024 & ON	24				
OR	L570006	HAMMER FLAIL UPTO 2024	24				
3	NUTA02200	NYLOC NUT	24				
4	BLTA20590	BOLT	24				
OR	BLTA20620	BOLT	AR				
OR	BLTA20650	BOLT	AR				
OR	2016618	BOLT	AR				
OR	BLTA20710	BOLT	AR			**IMPORTANT**	
OR	BLTA20740	BOLT	AR				
OR	BLTA20760	BOLT	AR			ENSURE BALANCE WEIGHT ARE	
5	850130 01	BALANCE WEIGHT (20G)	AR			NOT MOVED WHEN REPLACING FLAILS	
OR	850130 02	BALANCE WEIGHT (30G)	AR			EXACT POSITIONING IS CRITICAL	
OR	850130 03	BALANCE WEIGHT (50G)	AR			TO SMOOTH RUNNING	

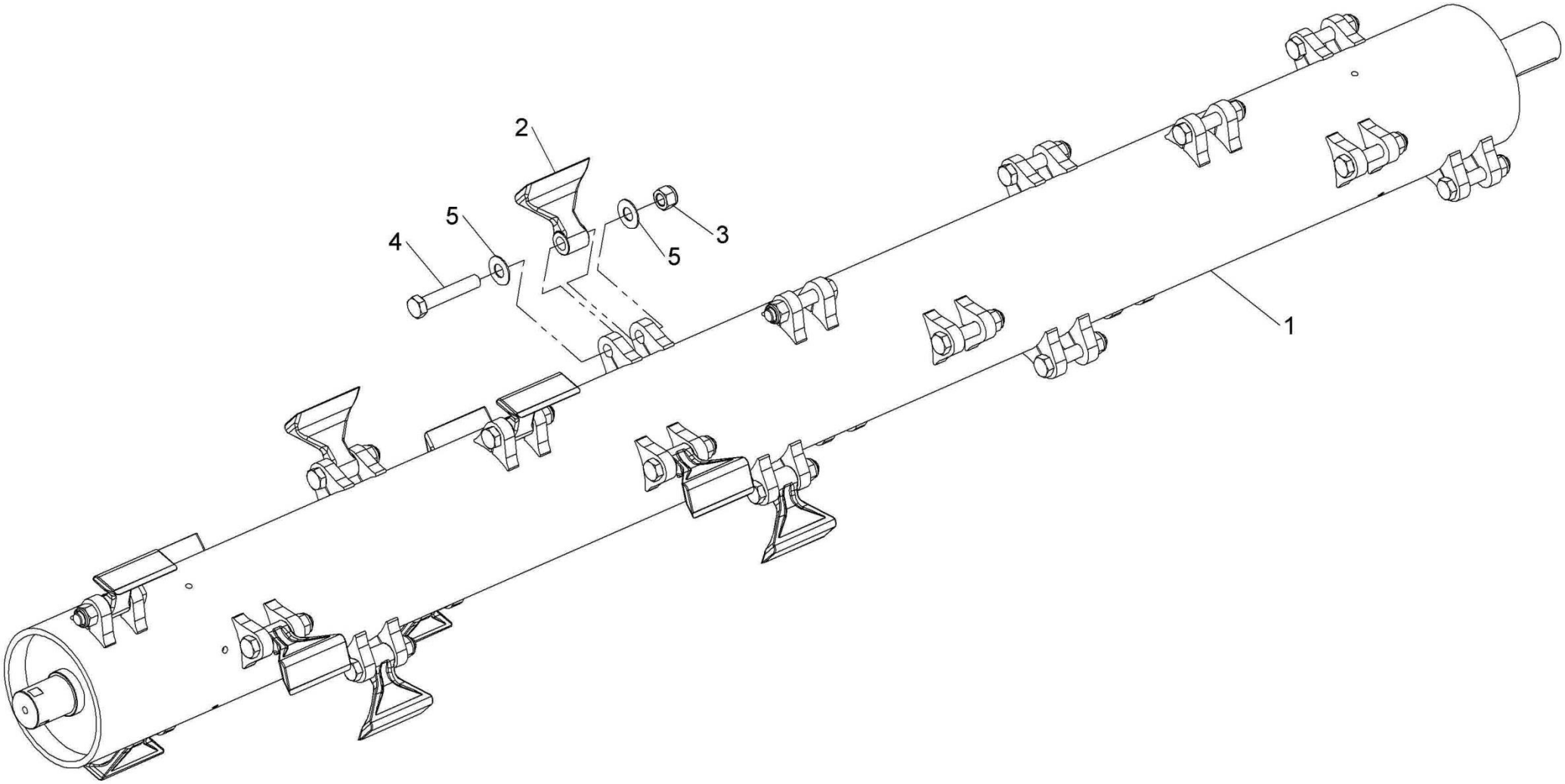

KIT-85001

Shelbourne Reynolds Engineering Limited

ASSY NUMBER: KIT-85002				ASSY DESCRIPTION: FLAIL MOWER SKIDS			
ITEM	PART NO	DESCRIPTION	QTY	ITEM	PART NO	DESCRIPTION	QTY
1	850035 01	SKID ARM	1				
2	850072 01	SKID ARM W/ASSY	1				
3	WSH-0018	WASHER	16				
4	NUT-0269	NUT	8				
5	BLTA12260	HEX HD BOLT	8				

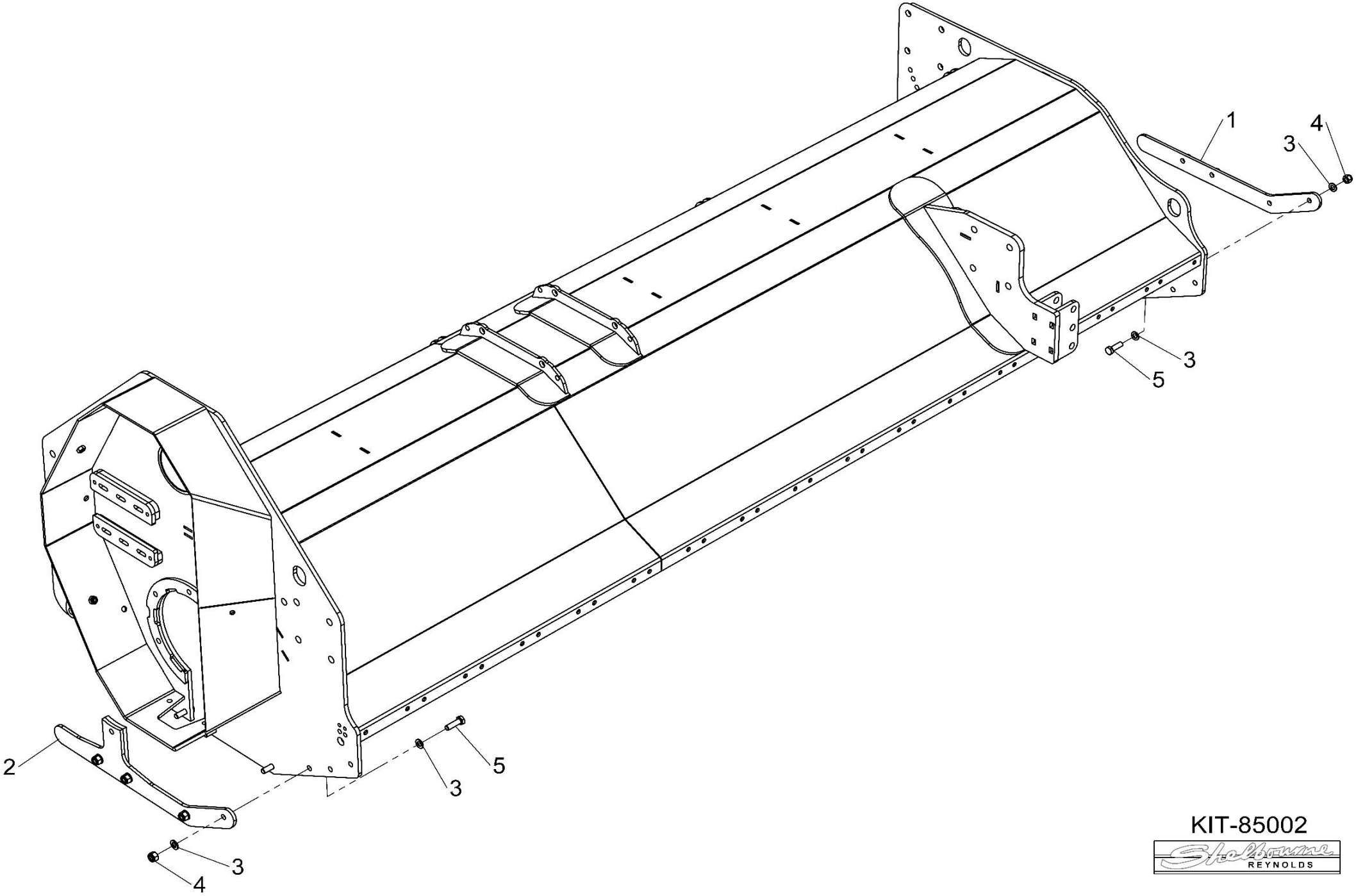

KIT-85002

Shelbourne Reynolds Engineering Limited

ASSY NUMBER: KIT-85003				ASSY DESCRIPTION: FLAIL MOWER SKIDS			
ITEM	PART NO	DESCRIPTION	QTY	ITEM	PART NO	DESCRIPTION	QTY
1	850037 01	SKID W/ASSY	1				
2	850042 01	SKID W/ASSY	1				
3	WSH-0018	WASHER	16				
4	NUT-0269	NUT	8				
5	BLTA12260	HEX HD BOLT	8				

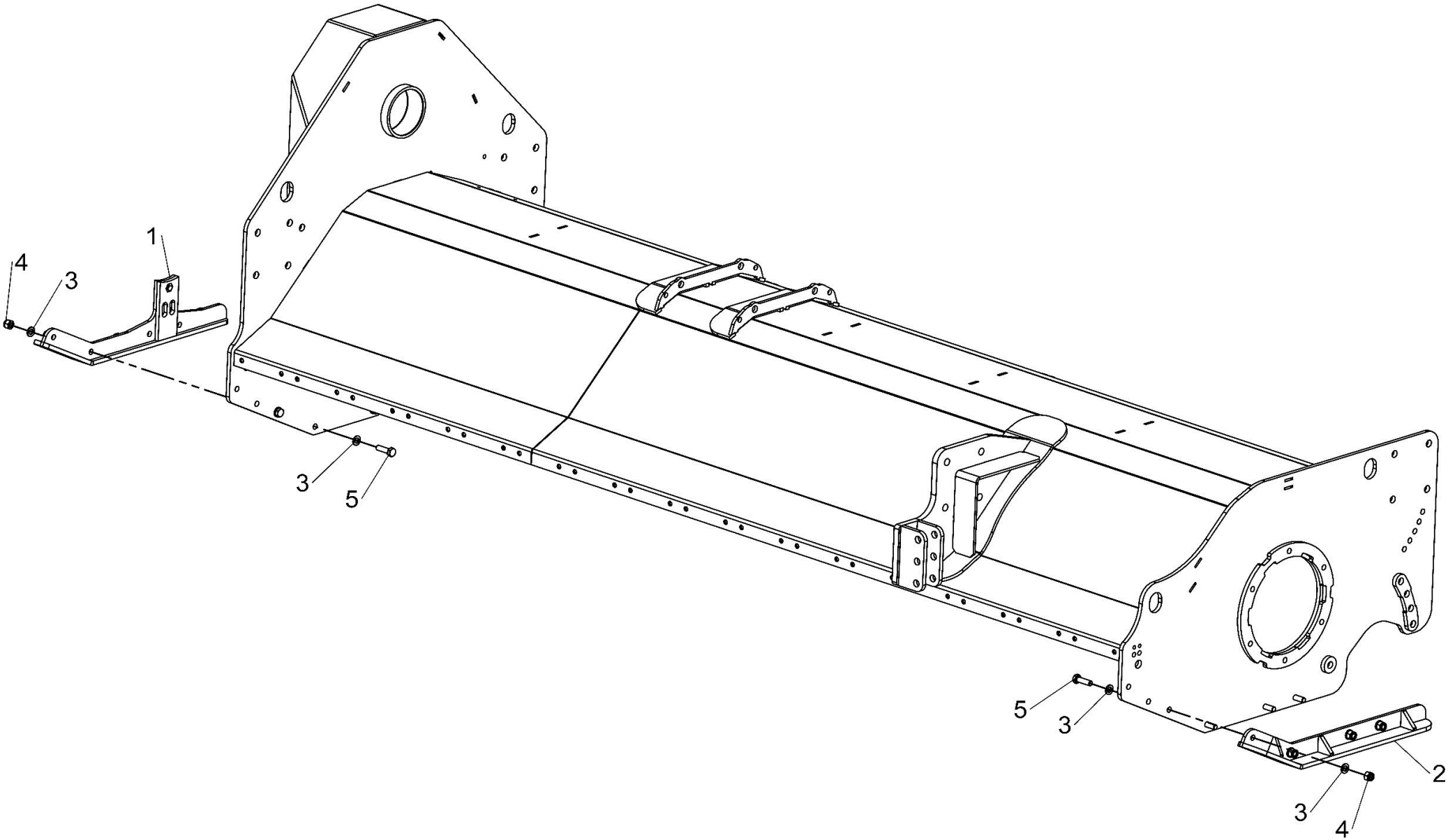

KIT-85003

ASSY NUMBER: KIT-85004				ASSY DESCRIPTION: HEAD STOCK SUB ASSY			
ITEM	PART NO	DESCRIPTION	QTY	ITEM	PART NO	DESCRIPTION	QTY
1	850279 01	MAIN HEAD STOCK W/A(2025 & ON)	1	37	850129 01	PTO HOOK	1
OR	850093 01	MAIN HEAD STOCK W/A(UPTO 2025)		38	190119 29	WASHER	4
2	850084 01	SLIDEWAY W/A	1	39	190119 20	WASHER	2
3	850088 01	SLIDEWAY W/A	1	40	PCN-00100	PLASTIC CANISTER	1
4	850210 01	2MM SHIM (2019 & ON)	10	41	HSS-0150	SET SCREW	3
OR	850094 01	2MM SHIM (UP TO 2019)	16	42	WSH-0012	WASHER	6
5	850210 02	1MM SHIM (2019 & ON)	16	43	NUT-0263	NUT	3
OR	850095 01	1MM SHIM (UP TO 2019)	16	44	TIE-0002	TIE WRAP SMALL	3
6	WSH-0061	WASHER	64	45	TIE-0006	TIE WRAP LARGE	3
7	HSS-0191	HEX HD BOLT	64	46	HSS-0319	HEX HD SETSCREW	4
8	850090 01	SLIDEWAY END BRACKET W/A	2	47	198800 89	WASHER	4
9	WSH-0024	WASHER	36				
10	NUT-0271	NUT	18				
11	HSS-0318	HEX HD SETSCREW	12				
12	803988 01	WEAR PAD	16				
13	610908 01	DOOR RAM	1				
14	BLTA16710	HEX HD BOLT	2				
15	WSH-0018	WASHER	12				
16	NUT-0269	NUT	6				
17	BLTA12470	HEX HD BOLT	1				
18	BLT-2270	HEX HD BOLT	1				
19	850212 01	WEAR PAD RETAINER (2019 & ON)	16				
OR	850100 01	WEAR PAD RETAINER (UP TO 2019)	8				
20	WSH-1005	DOWTY WASHER	2				
21	850121 01	HEAD STACK FILL IN PLATE	1				
22	BLTA12290	HEX HD BOLT	4				
23	800199 01	LOWER LINK PIN	4				
24	PIN-01950	LYNCH PIN	5				
25	850109 01	TOP MOUNT W/A	1				
26	COU-0162	QUICK RELEASE COUPLING ASSY	2				
27	HMA-0055	HYDRAULIC ADAPTOR	2				
28	WSH-1015	DOWTY WASHER	2				
29	HHAC32005	HYDRAULIC HOSE ASSY	1				
30	HHCC24005	HYDRAULIC HOSE ASSY	1				
31	850210 03	1.5mm SHIM (2019 & ON)	16				
32	HCPD01400	HYDRAULIC PIP CLAMP 14mm	3				
33	HMA-0052	HYDRAULIC ADAPTOR	2				
34	SCCA08293	CAP HD SCREW	3				
35	PIN-01601	LYNCH PIN	1				
36	800198 01	TOP LINK PIN	1				

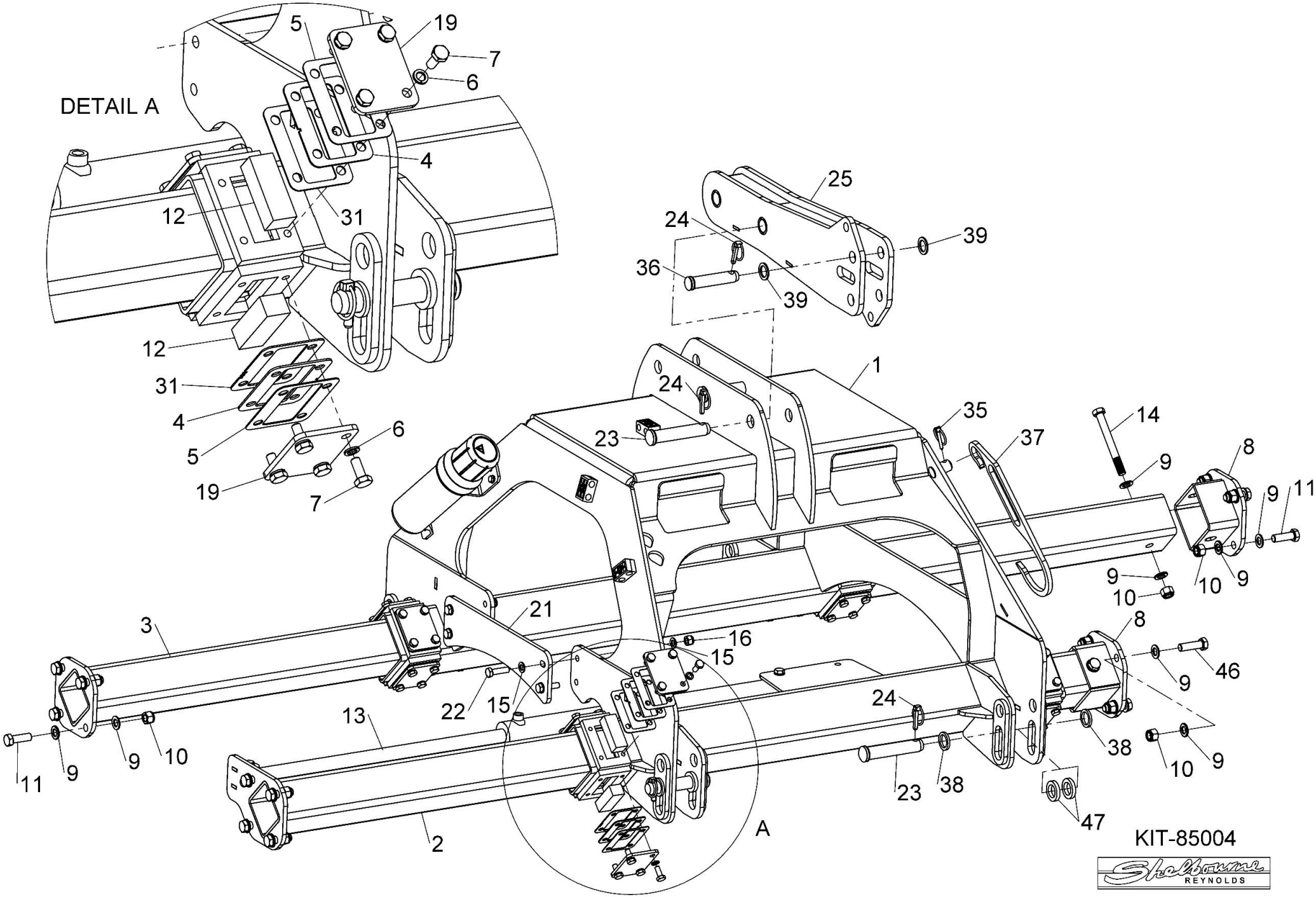
DETAIL A
5
19
7
6
4
12
31
12
31
4
5
19
7
6
25
24
39
36
39
1
24
23
35
37
14
9
8
9
11
9
10
9
10
8
3
21
16
15
46
9
22
15
24
13
38
10
9
11
9
10
23
38
47
2
A
KIT-85004

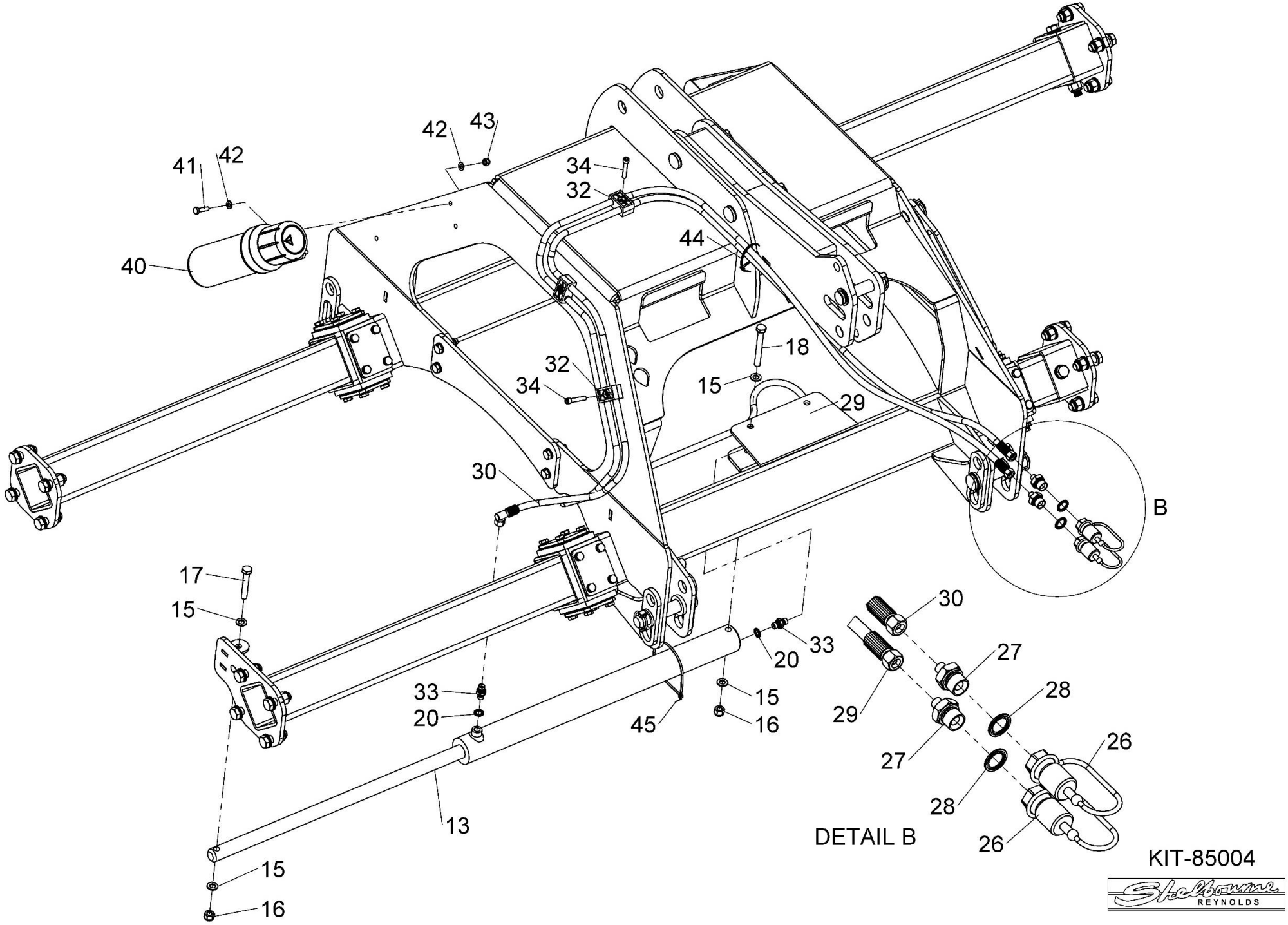
41
42
42
43
40
34
32
44
18
15
29
32
34
30
B
17
15
33
20
45
15
16
13
15
16
30
27
28
29
27
26
28
26
DETAIL B
KIT-85004
Shelbourne
REYNOLDS

Shelbourne Reynolds Engineering Limited

ASSY NUMBER: KIT-85005				ASSY DESCRIPTION: FBO2800 TRANSFER KIT			
ITEM	PART NO	DESCRIPTION	QTY	ITEM	PART NO	DESCRIPTION	QTY
1	850149 01	CHEVRON TRANSFER	1				
2	850150 01	SHORT CHEVRON TRANSFER	1				
3	850151 01	SHELBOURNE TRANSFER	2				
4	850152 01	SHELBOURNE TRANSFER	1				
5	850153 01	FBO2800 FRONT TRANSFER	1				
6	850154 01	BFO2800 GUARD TRANSFER	1				
7	850155 01	GREASE & LUBRICATION TRANSFER	1				
8	850156 01	MOWER SAFETY TRANSFER	1				
9	850157 01	PTO SPEED TRANSFER	1				
10	850158 01	BELT TENSION TRANSFER	1				
11	850159 01	CHECK FLAIL BOLT TRANSFER	1				
12	850160 01	READ MANUAL (OIL) TRANSFER	1				
13	850161 01	PTO TRANSFER	1				
14	850162 01	MOWER SAFETY TRANSFER	1				
15	TNF-0011	STOP ENGINE TRANSFER	1				
16	800218 01	BELT STOP TRANSFER	1				
17	190702 04	SLING POINT TRANSFER	4				

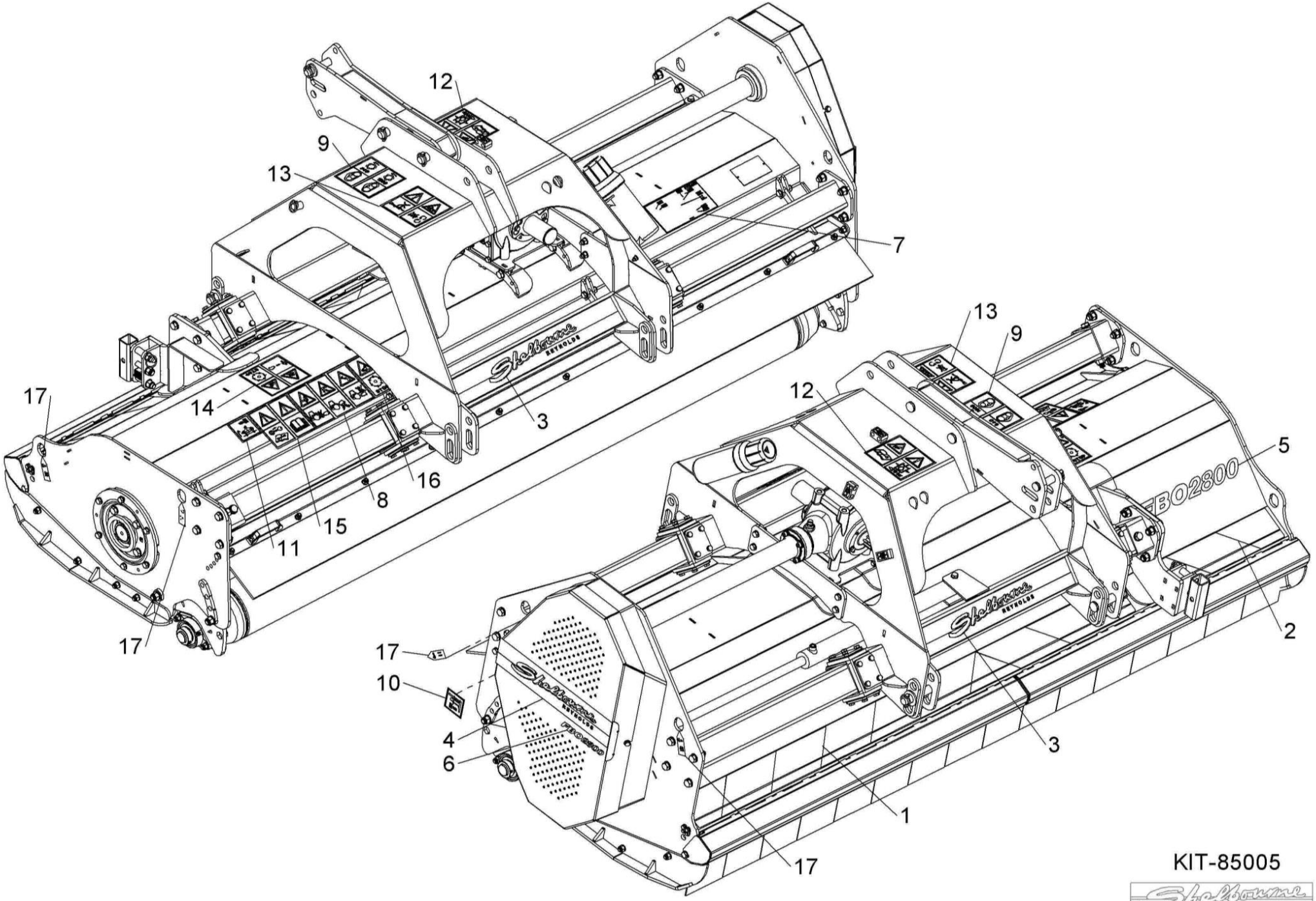

KIT-85005

ASSY NUMBER: KIT-85006				ASSY DESCRIPTION: NOSE KIT (RUBBER)			
ITEM	PART NO	DESCRIPTION	QTY	ITEM	PART NO	DESCRIPTION	QTY
1	850168 01	STAND SOCKET W/A	1				
2	850177 01	SPACER	2				
3	850188 01	RHS NOSE W/A	1				
4	850192 01	LHS NOSE W/A	1				
5	850164 01	RUBBER CLAMP STRIP	1				
6	850187 01	FRONT FLAP	1				
7	WSH-0024	WASHER	2				
8	NUT-0271	NUT	2				
9	WSH-0018	WASHER	8				
10	NUT-0269	NUT	4				
11	HSS-0238	SETSCREW	2				
12	HSS-0250	SETSCREW	2				
13	HSSG10204	TENSILOCK BOLT	8				
14	WSH-0015	WASHER	24				
15	WSH-0061	WASHER	24				
16	HSS-0191	BOLT	24				

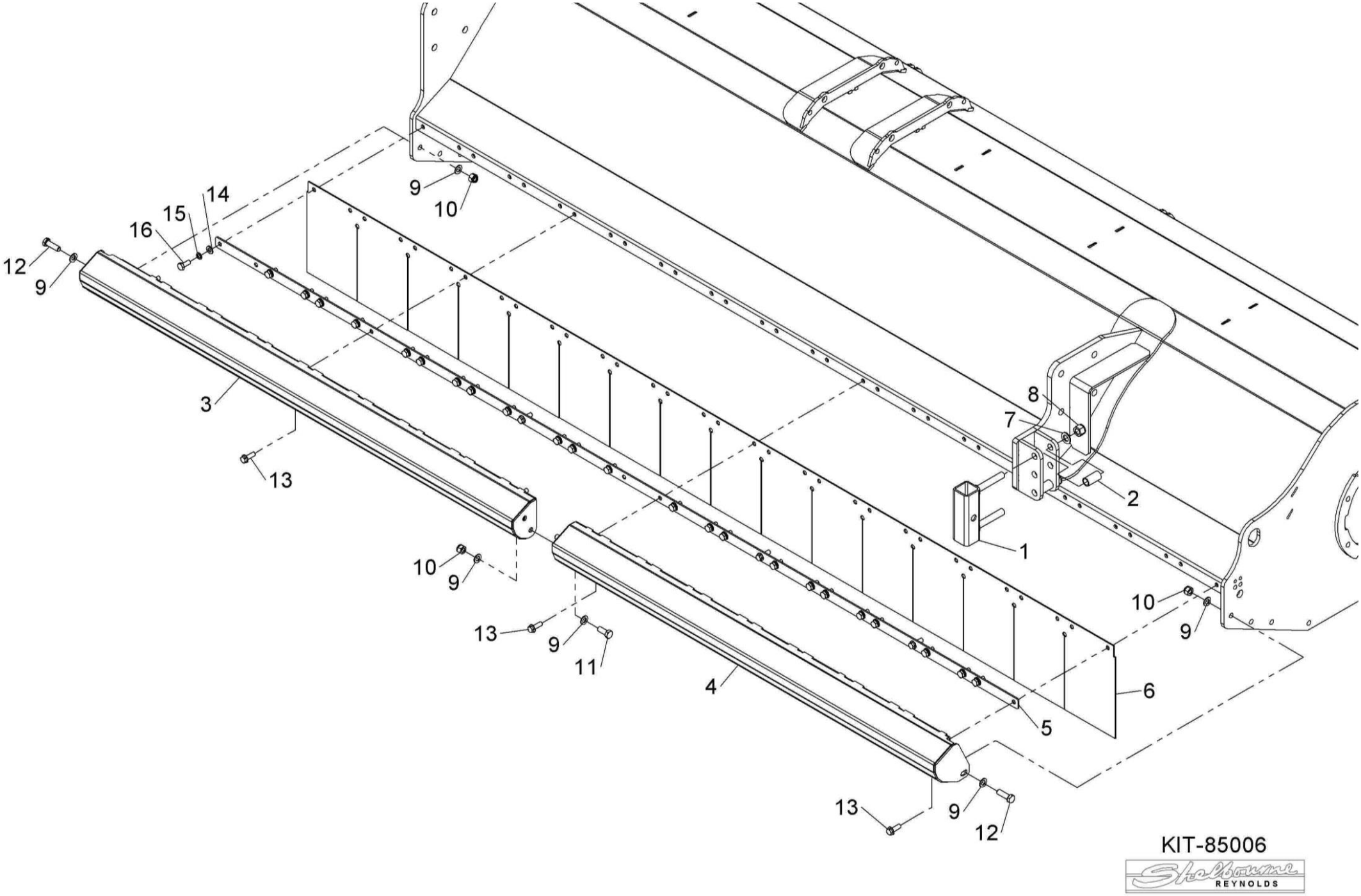
9
10
14
15
16
12
9
3
13
8
7
2
1
10
9
10
9
13
9
11
4
6
5
13
9
12
KIT-85006
Shelbourne
REYNOLDS

ASSY NUMBER: KIT-85008				ASSY DESCRIPTION: SKID KIT			
ITEM	PART NO	DESCRIPTION	QTY	ITEM	PART NO	DESCRIPTION	QTY
1	850174 01	SKID W/A	1				
2	850174 02	SKID W/A	1				
3	WSH-0018	PLAIN WASHER	16				
4	NUT-0269	NYLOC NUT	8				
5	BLTA12260	BOLT	8				

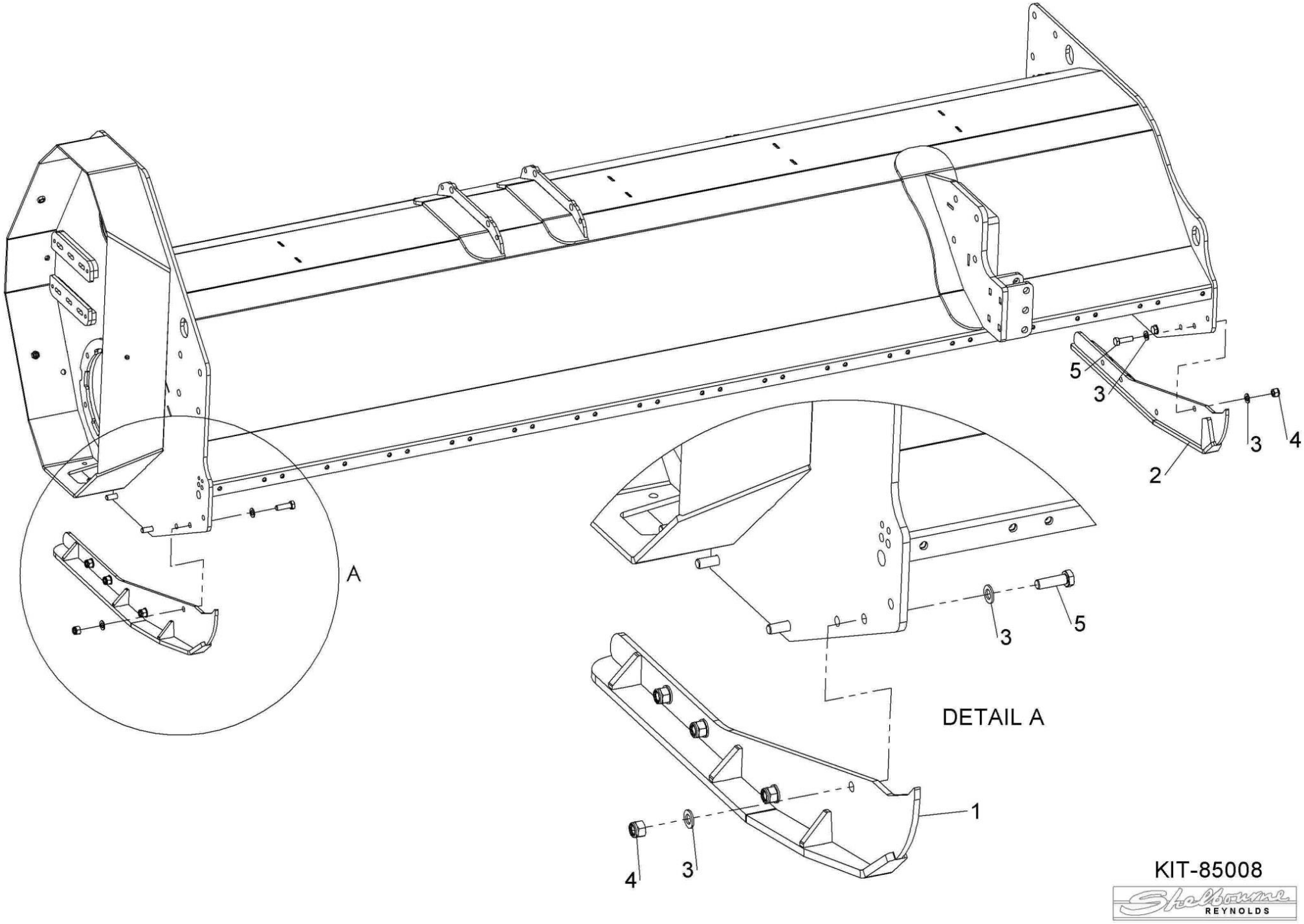
5
3
3
4
2
A
3
5
DETAIL A
1
4
3
KIT-85008
Shelbourne
REYNOLDS

Shelbourne Reynolds Engineering Limited

ASSY NUMBER: KIT-85009				ASSY DESCRIPTION: MULCHING KIT			
ITEM	PART NO	DESCRIPTION	QTY	ITEM	PART NO	DESCRIPTION	QTY
1	850221 01	MULCHING BAR W/A	4				
2	BLT-3790	COACH BOLT	12				
3	WSH-0018	PLAIN WASHER	12				
4	NUT-0269	NYLOC NUT	12				

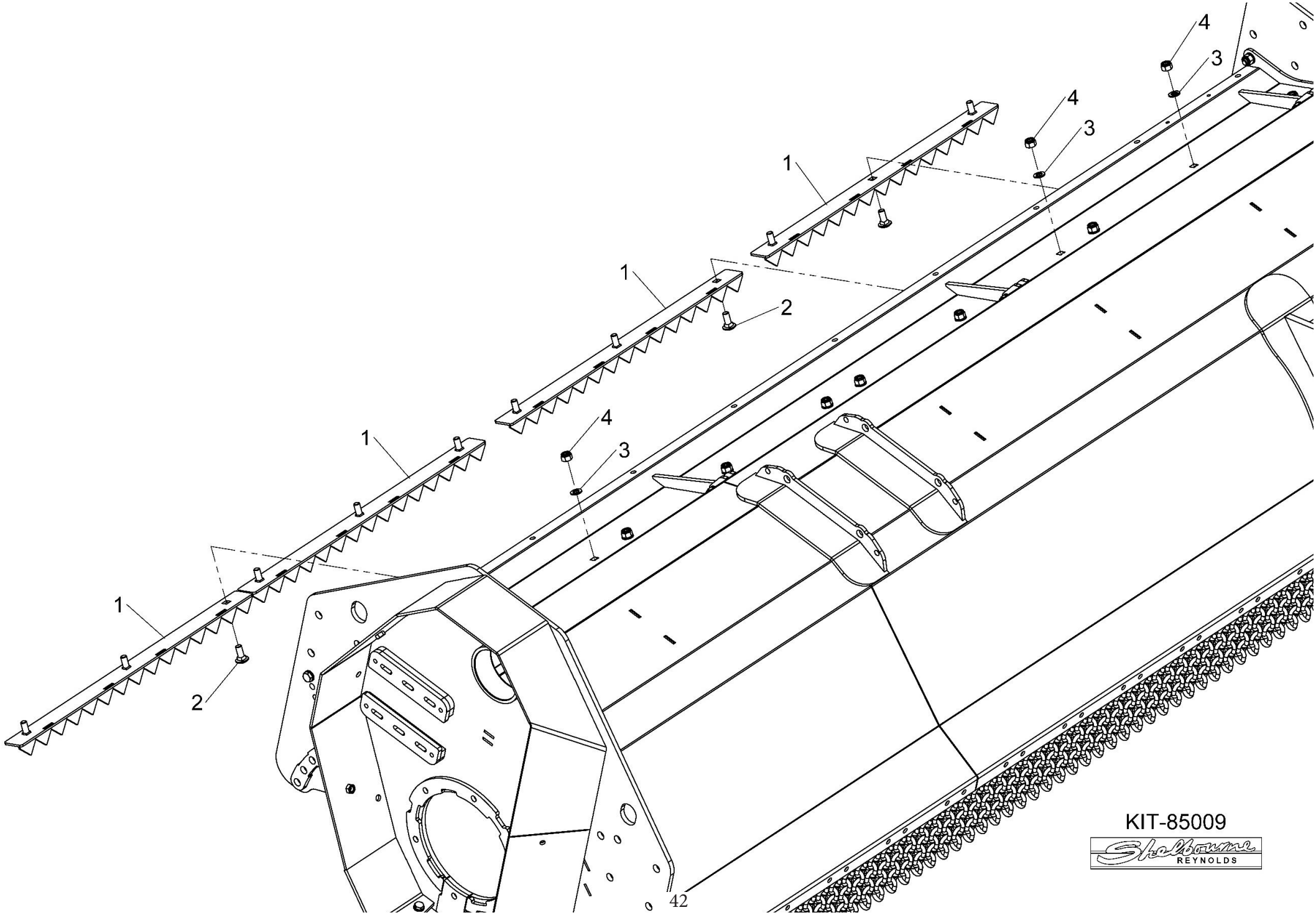
1
2
3
4
KIT-85009
Shelbourne
REYNOLDS

ASSY NUMBER: KIT-85013				ASSY DESCRIPTION: 2.5m HAMMER FLAIL ROTOR KIT			
ITEM	PART NO	DESCRIPTION	QTY	ITEM	PART NO	DESCRIPTION	QTY
1	850266 01	2.5m HAMMER FLAIL ROTOR W/A	1				
2	FLL-35000	HAMMER FLAIL 2024 & ON	24				
OR	L570006	HAMMER FLAIL UPTO 2024	24				
3	NUTA02200	NYLOC NUT	24				
4	BLTA20590	BOLT	24				
OR	BLTA20620	BOLT	AR				
OR	BLTA20650	BOLT	AR				
OR	2016618	BOLT	AR				
OR	BLTA20710	BOLT	AR			**IMPORTANT**	
OR	BLTA20740	BOLT	AR				
OR	BLTA20760	BOLT	AR			ENSURE BALANCE WEIGHT ARE	
5	850130 01	BALANCE WEIGHT (20G)	AR			NOT MOVED WHEN REPLACING FLAILS	
OR	850130 02	BALANCE WEIGHT (30G)	AR			EXACT POSITIONING IS CRITICAL	
OR	850130 03	BALANCE WEIGHT (50G)	AR			TO SMOOTH RUNNING	

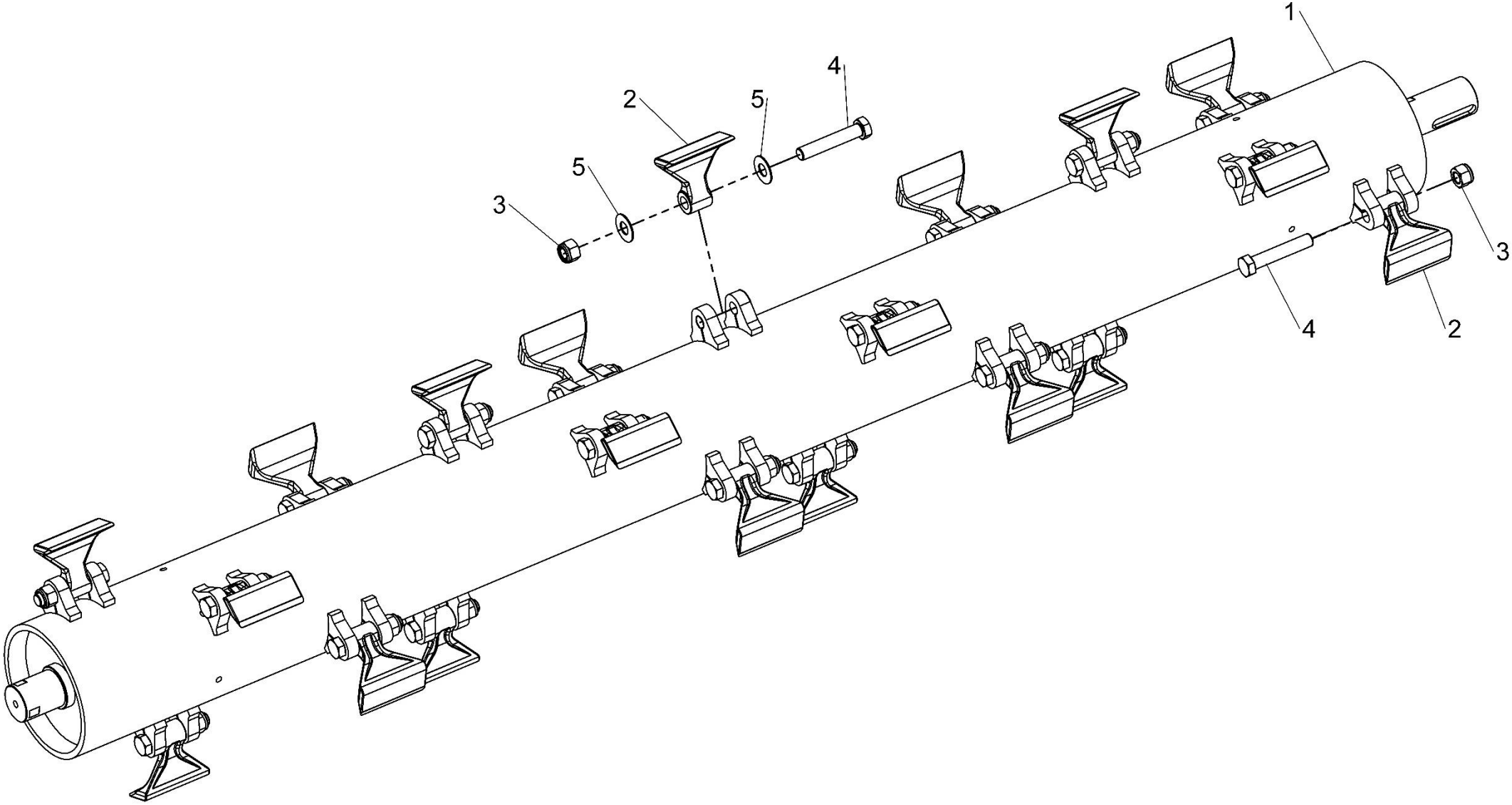

KIT-85013

ASSY NUMBER: KIT-85014				ASSY DESCRIPTION: 2.5MT NOSE KIT (RUBBER)			
ITEM	PART NO	DESCRIPTION	QTY	ITEM	PART NO	DESCRIPTION	QTY
1	850168 01	STAND SOCKET W/A	1				
2	850177 01	SPACER	2				
3	850272 01	RHS NOSE W/A	1				
4	850270 01	LHS NOSE W/A	1				
5	850269 01	RUBBER CLAMP STRIP	1				
6	850268 01	FRONT FLAP	1				
7	WSH-0024	WASHER	2				
8	NUT-0271	NUT	2				
9	WSH-0018	WASHER	8				
10	NUT-0269	NUT	4				
11	HSS-0238	SETSCREW	2				
12	HSS-0250	SETSCREW	2				
13	HSSG10204	TENSILOCK BOLT	8				
14	WSH-0015	WASHER	24				
15	WSH-0061	WASHER	24				
16	HSS-0191	BOLT	24				

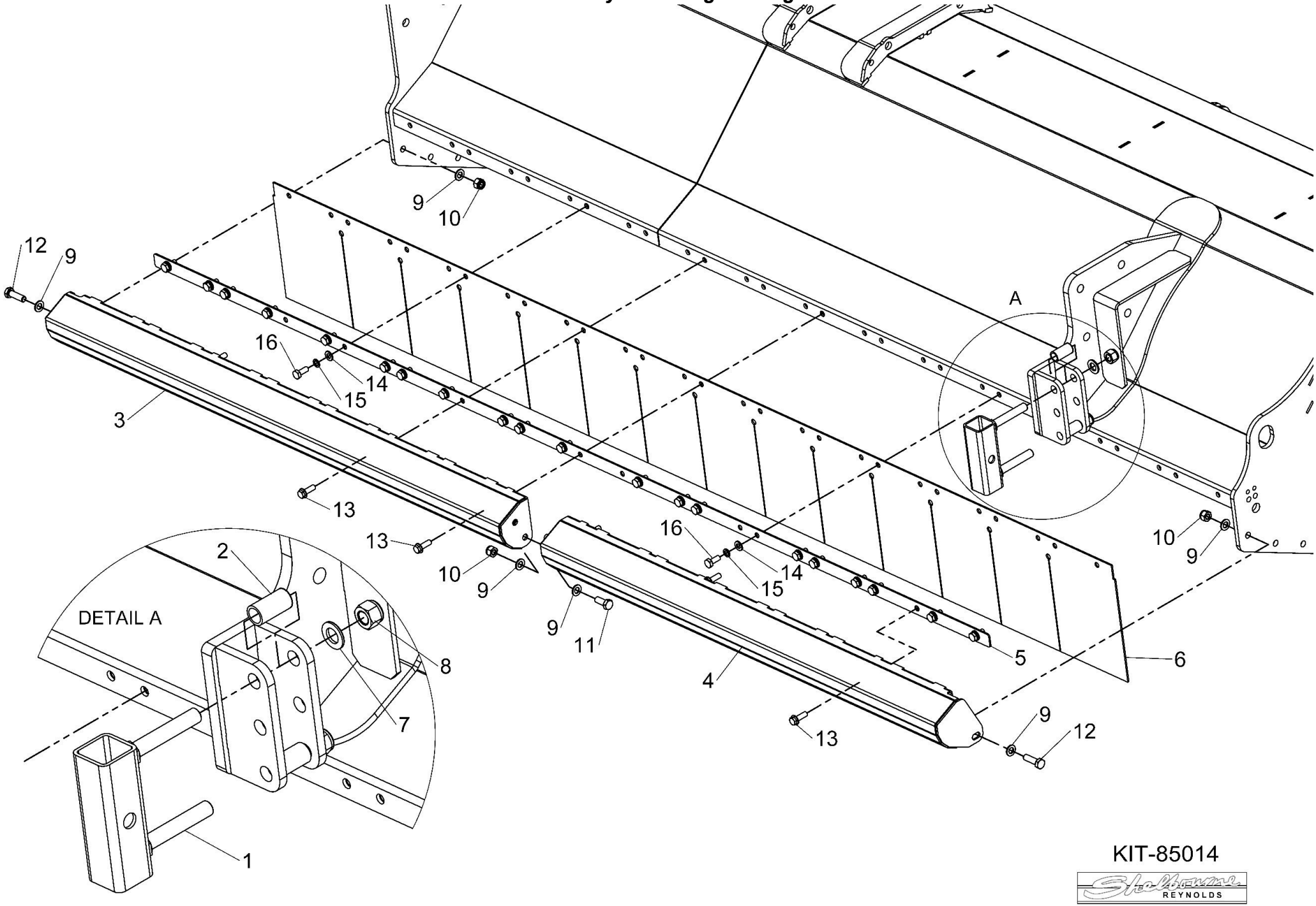
12
9
10
16
14
15
3
13
A
2
DETAIL A
8
7
1
11
4
5
6
KIT-85014
Shelbourne
REYNOLDS

ASSY NUMBER: KIT-85015				ASSY DESCRIPTION: 2.5M HEAD STOCK SUB ASSY			
ITEM	PART NO	DESCRIPTION	QTY	ITEM	PART NO	DESCRIPTION	QTY
1	850279 01	MAIN HEAD STOCK W/A	1	38	190119 29	WASHER	4
2	850277 01	SLIDEWAY W/A	1	39	190119 20	WASHER	2
3	850275 01	SLIDEWAY W/A	1	40	PCN-00100	PLASTIC CANISTER	1
4	850210 01	2MM SHIM (2019 & ON)	10	41	HSS-0150	SET SCREW	3
OR	850094 01	2MM SHIM (UP TO 2019)	16	42	WSH-0012	WASHER	6
5	850210 02	1MM SHIM (2019 & ON)	16	43	NUT-0263	NUT	3
OR	850095 01	1MM SHIM (UP TO 2019)	16	44	TIE-0002	TIE WRAP SMALL	3
6	WSH-0061	WASHER	64	45	TIE-0006	TIE WRAP LARGE	3
7	HSS-0191	HEX HD BOLT	64	46	HSS-0319	HEX HD SETSCREW	4
8	850090 01	SLIDEWAY END BRACKET W/A	2	47	198800 89	WASHER	4
9	WSH-0024	WASHER	36				
10	NUT-0271	NUT	18				
11	HSS-0318	HEX HD SETSCREW	12				
12	803988 01	WEAR PAD	16				
13	610908 01	DOOR RAM	1				
14	BLTA16710	HEX HD BOLT	2				
15	WSH-0018	WASHER	12				
16	NUT-0269	NUT	6				
17	BLTA12470	HEX HD BOLT	1				
18	BLT-2270	HEX HD BOLT	1				
19	850212 01	WEAR PAD RETAINER (2019 & ON)	16				
OR	850100 01	WEAR PAD RETAINER (UP TO 2019)	8				
20	WSH-1005	DOWTY WASHER	2				
21	850121 01	HEAD STACK FILL IN PLATE	1				
22	BLTA12290	HEX HD BOLT	4				
23	800199 01	LOWER LINK PIN	4				
24	PIN-01950	LYNCH PIN	5				
25	850109 01	TOP MOUNT W/A	1				
26	COU-0162	QUICK RELEASE COUPLING ASSY	2				
27	HMA-0055	HYDRAULIC ADAPTOR	2				
28	WSH-1015	DOWTY WASHER	2				
29	HHAC32005	HYDRAULIC HOSE ASSY	1				
30	HHCC24005	HYDRAULIC HOSE ASSY	1				
31	850210 03	1.5mm SHIM (2019 & ON)	16				
32	HCPD01400	HYDRAULIC PIP CLAMP 14mm	3				
33	HMA-0052	HYDRAULIC ADAPTOR	2				
34	SCCA08293	CAP HD SCREW	3				
35	PIN-01601	LYNCH PIN	1				
36	800198 01	TOP LINK PIN	1				
37	850129 01	PTO HOOK	1				

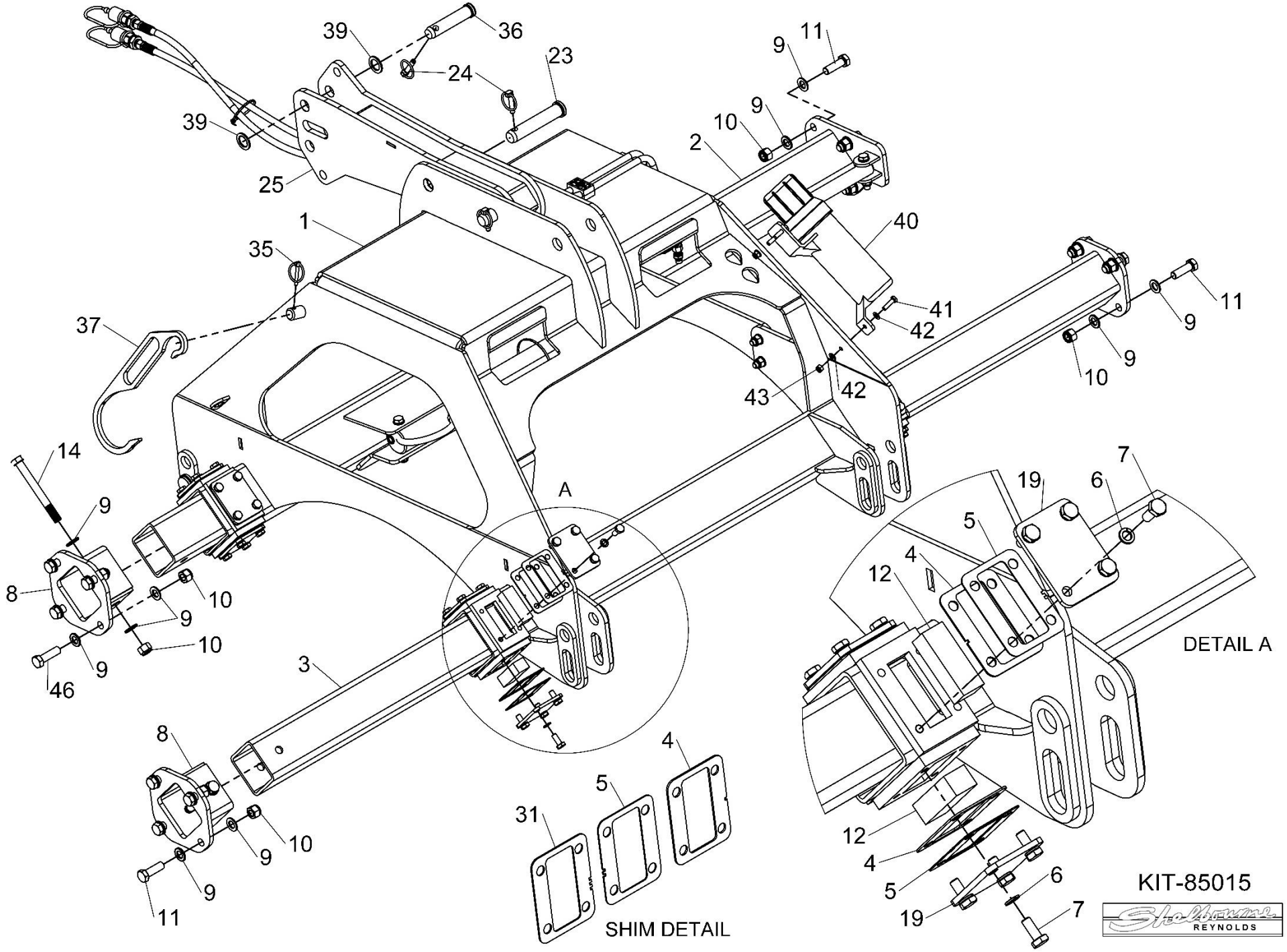
39
36
24
23
9
11
39
9
10
2
25
1
40
35
41
42
37
11
9
9
10
43
42
14
7
19
6
A
9
5
4
12
8
10
9
10
DETAIL A
9
46
3
8
4
5
31
10
9
12
4
9
11
5
6
19
7
SHIM DETAIL
KIT-85015
Shelbourne
REYNOLDS

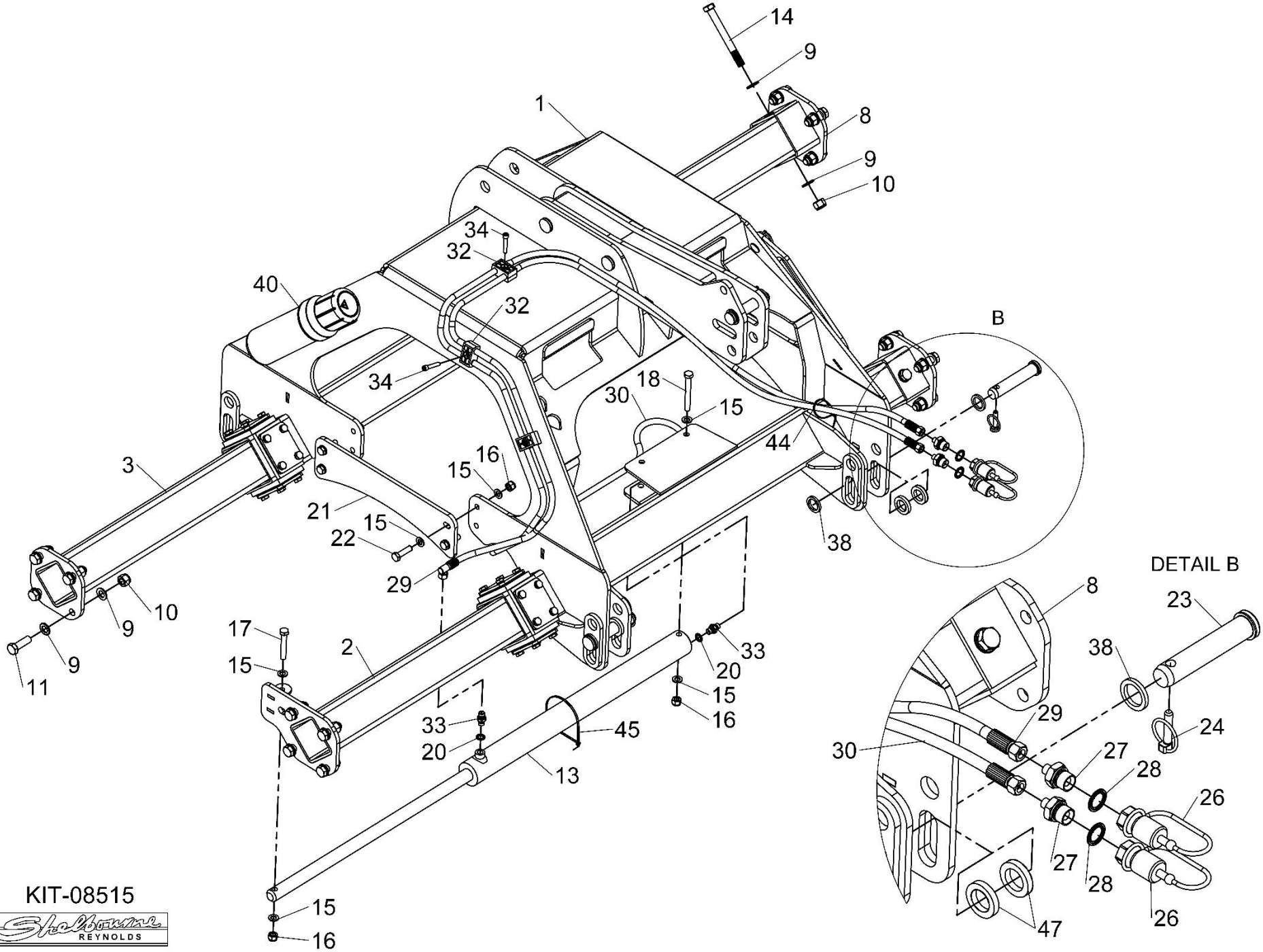
14
9
1
8
9
10
34
32
40
32
B
34
18
30
15
44
3
16
15
21
15
22
38
29
DETAIL B
8
23
10
9
17
2
33
38
9
15
20
11
15
16
29
24
33
45
30
27
20
28
13
26
27
28
26
47
15
16
KIT-08515

ASSY NUMBER: KIT-85016				ASSY DESCRIPTION: 2.5MT NOSE KIT (METAL FLAP)			
ITEM	PART NO	DESCRIPTION	QTY	ITEM	PART NO	DESCRIPTION	QTY
1	850168 01	STAND SOCKET W/A	1				
2	850177 01	SPACER	2				
3	850185 01	METAL FLAP HANGER	7				
4	850272 01	RHS NOSE W/A	1				
5	850270 01	LHS NOSE W/A	1				
6	850285 01	GUARD FLAP W/A LHS	1				
7	850194 01	GUARD FLAP W/A	20				
8	850186 01	METAL FLAP HANGER ROD	1				
9	WSH-0024	WASHER	2				
10	NUT-0271	NUT	2				
11	WSH-0018	WASHER	8				
12	NUT-0269	NUT	4				
13	HSS-0238	SETSCREW	2				
14	HSS-0250	SETSCREW	2				
15	HSSG10145	TENSILOCK BOLT	6				
16	PIN-1620	ROLL PIN	2				
17	850288 01	GUARD FLAP W/A RHS	1				

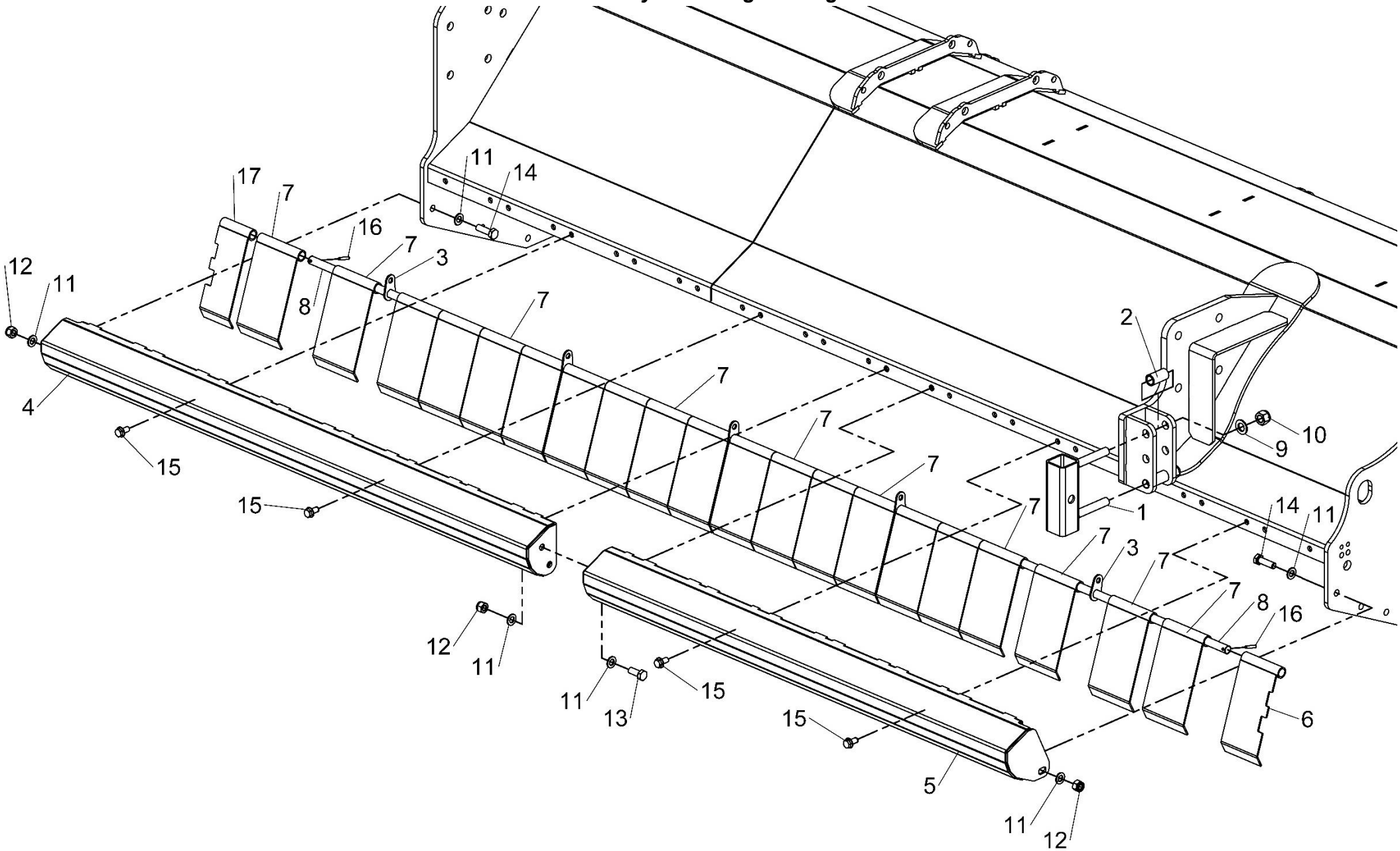
17
7
16
12
11
8
3
7
4
15
15
11
14
7
7
7
7
2
10
9
1
14
11
7
3
7
7
8
16
12
11
11
13
15
15
6
5
11
12

KIT-85016

ASSY NUMBER: KIT-85017				ASSY DESCRIPTION: FBO2500 TRANSFER KIT			
ITEM	PART NO	DESCRIPTION	QTY	ITEM	PART NO	DESCRIPTION	QTY
1	850149 01	CHEVRON TRANSFER	1				
2	850150 01	SHORT CHEVRON TRANSFER	1				
3	850151 01	SHELBOURNE TRANSFER	2				
4	850152 01	SHELBOURNE TRANSFER	1				
5	850291 01	FBO2500 FRONT TRANSFER	1				
6	850292 01	BFO2500 GUARD TRANSFER	1				
7	850155 01	GREASE & LUBRICATION TRANSFER	1				
8	850156 01	MOWER SAFETY TRANSFER	1				
9	850157 01	PTO SPEED TRANSFER	1				
10	850158 01	BELT TENSION TRANSFER	1				
11	850159 01	CHECK FLAIL BOLT TRANSFER	1				
12	850160 01	READ MANUAL (OIL) TRANSFER	1				
13	850161 01	PTO TRANSFER	1				
14	850162 01	MOWER SAFETY TRANSFER	1				
15	TNF-0011	STOP ENGINE TRANSFER	1				
16	800218 01	BELT STOP TRANSFER	1				
17	190702 04	SLING POINT TRANSFER	4				

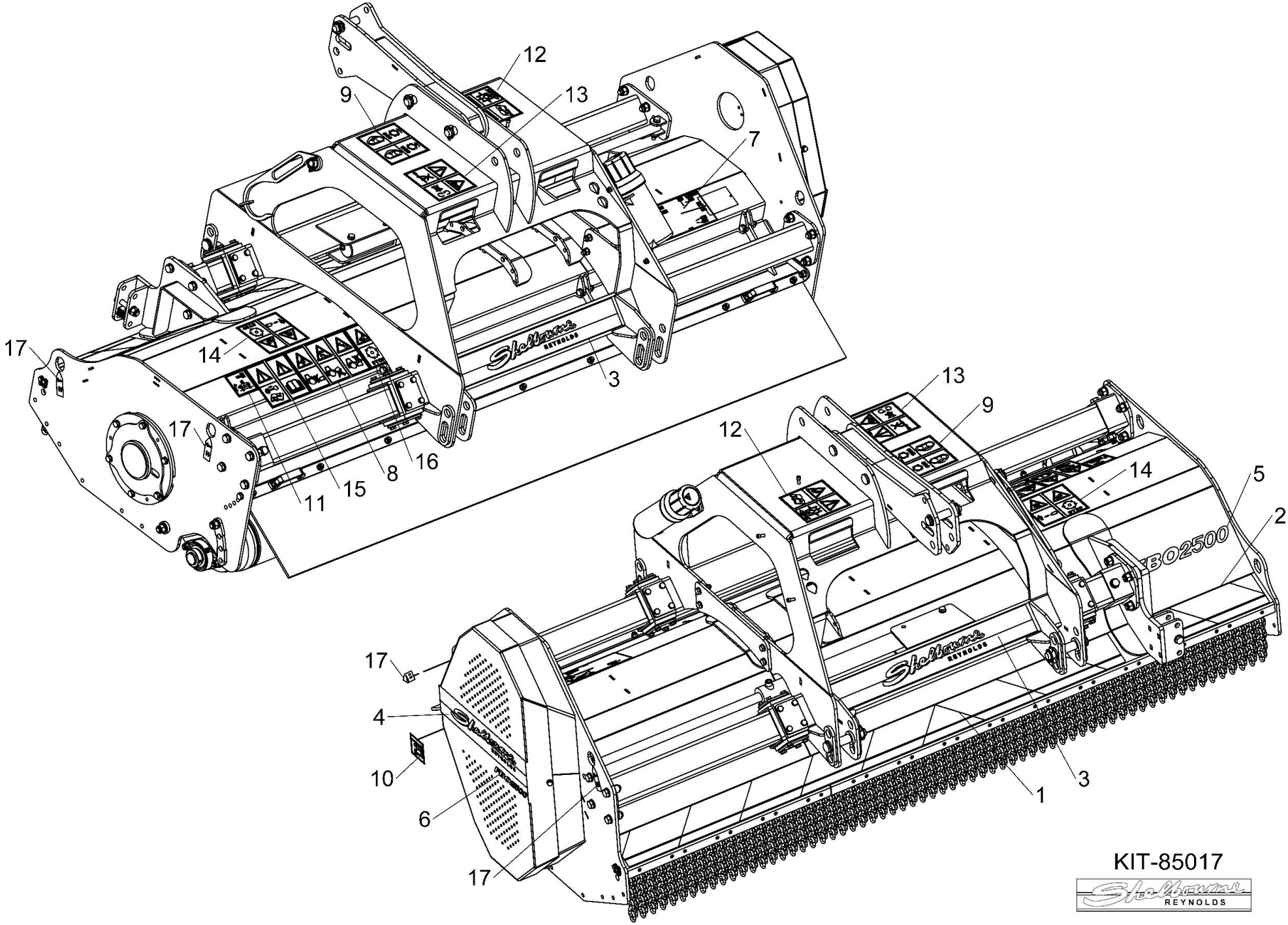
12
13
9
7
17
14
3
17
16
8
15
11
13
9
12
14
5
2
BO2500
17
4
10
6
17
1
3
KIT-85017
Shelbourne
REYNOLDS

ASSY NUMBER: KIT-85018				ASSY DESCRIPTION: 2.8m HAMMER 30 FLAIL ROTOR KIT			
ITEM	PART NO	DESCRIPTION	QTY	ITEM	PART NO	DESCRIPTION	QTY
1	850309 01	HAMMER FLAIL ROTOR W/A	1				
2	FLL-35000	HAMMER FLAIL 2024 & ON	30				
OR	L570006	HAMMER FLAIL UPTO 2024	30				
3	NUTA02200	NYLOC NUT	30				
4	BLTA20590	BOLT	30				
OR	BLTA20620	BOLT	AR				
OR	BLTA20650	BOLT	AR				
OR	2016618	BOLT	AR				
OR	BLTA20710	BOLT	AR			**IMPORTANT**	
OR	BLTA20740	BOLT	AR				
OR	BLTA20760	BOLT	AR			ENSURE BALANCE WEIGHT ARE	
5	850130 01	BALANCE WEIGHT (20G)	AR			NOT MOVED WHEN REPLACING FLAILS	
OR	850130 02	BALANCE WEIGHT (30G)	AR			EXACT POSITIONING IS CRITICAL	
OR	850130 03	BALANCE WEIGHT (50G)	AR			TO SMOOTH RUNNING	

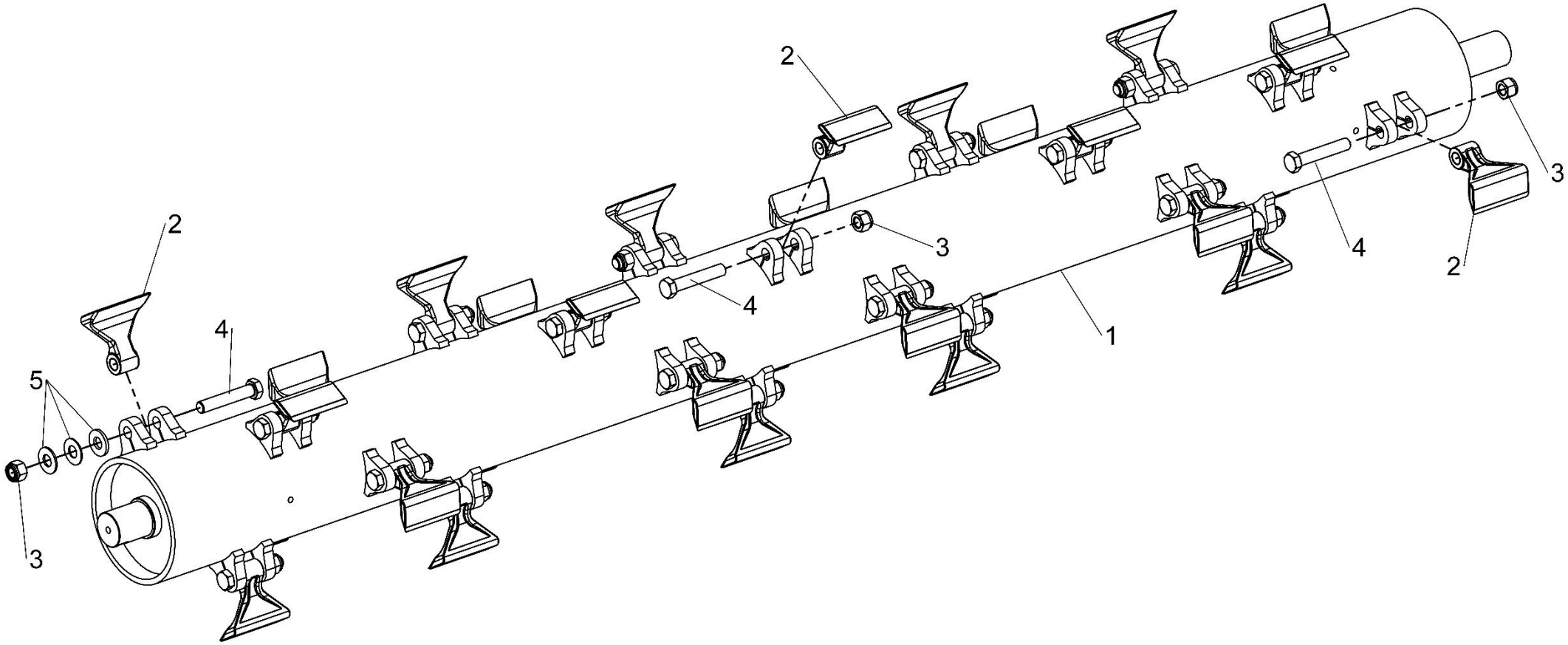

KIT-85018